68・送風機(2)

SSA-S600

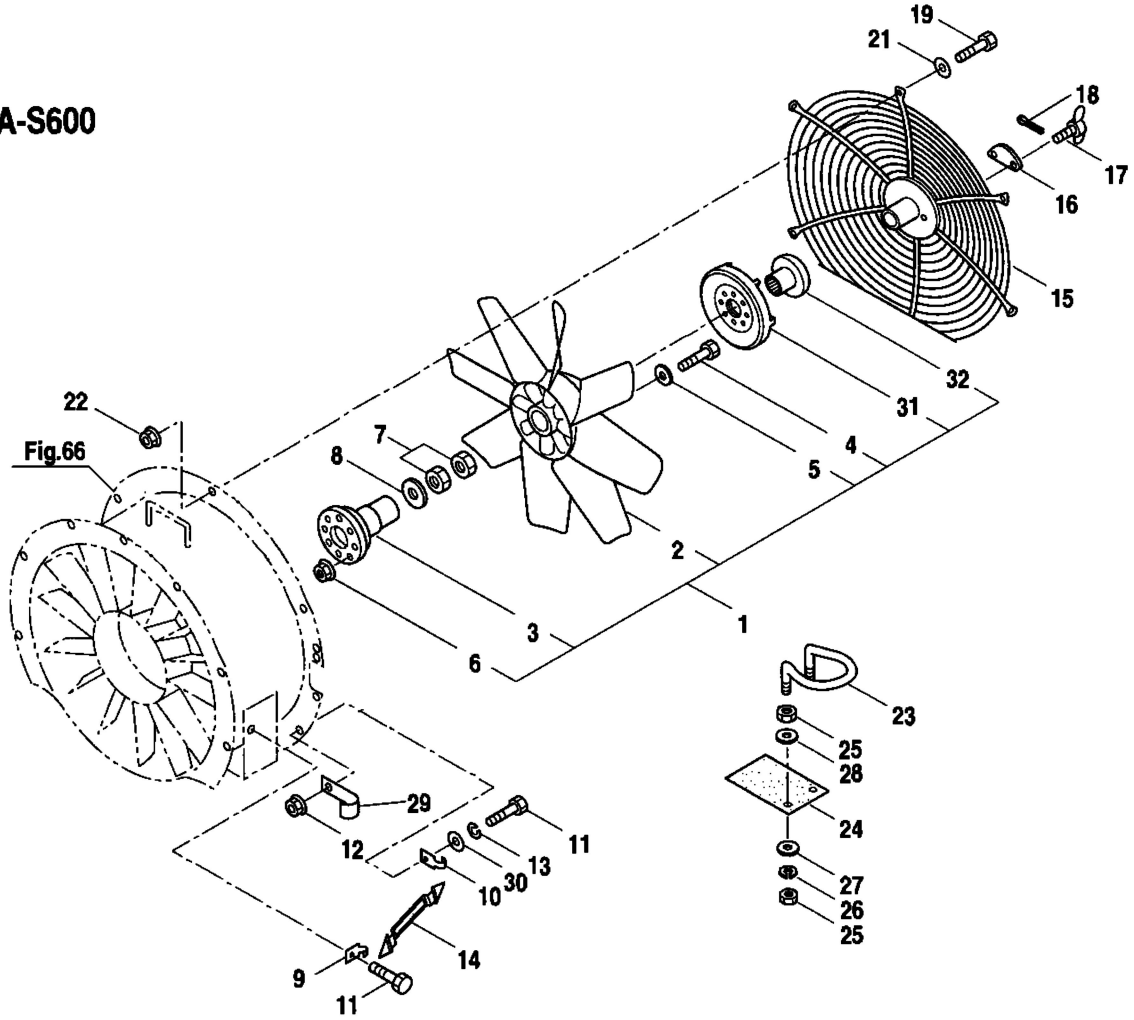
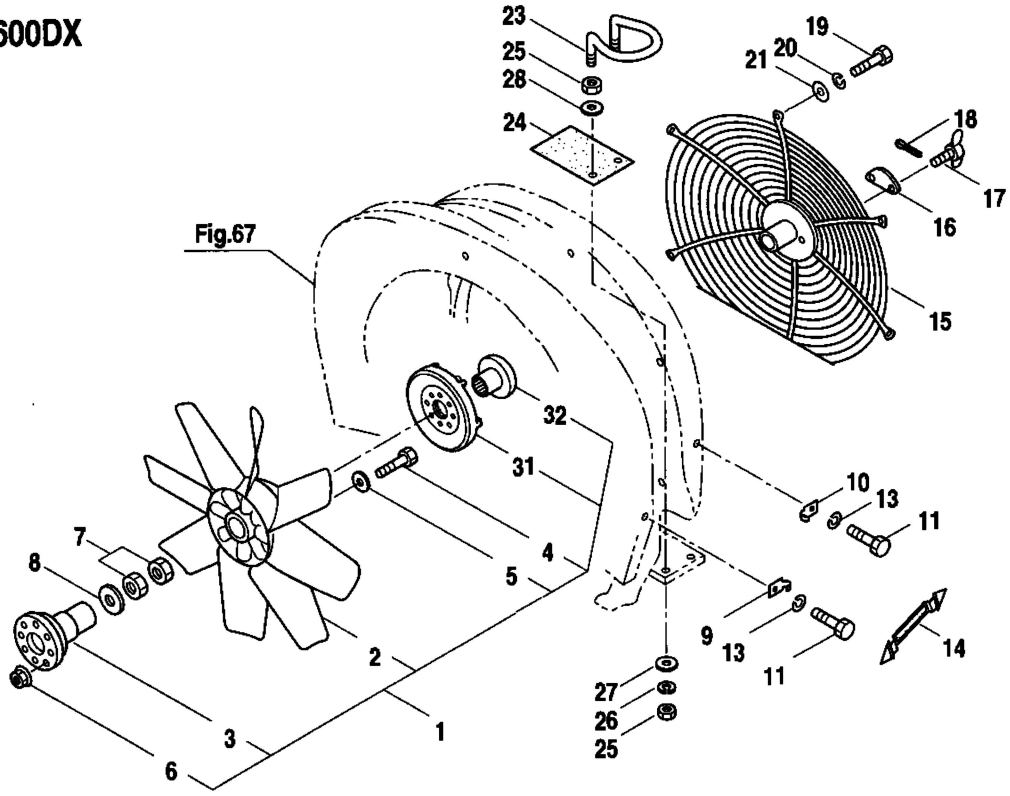
SSA-S600DX