マフラ

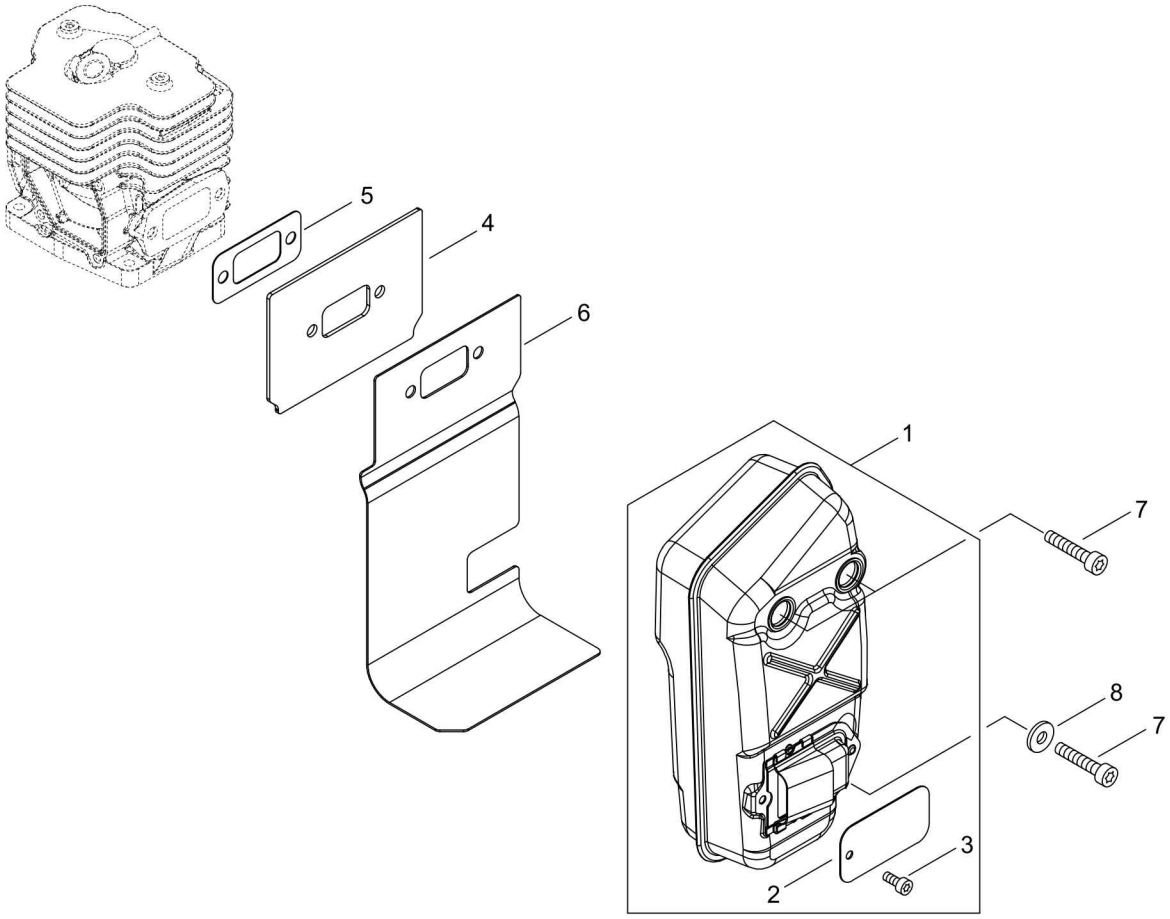

Copyright © 2020 YAMABIKO CORPORATION All Right Reserved