燃料タンク

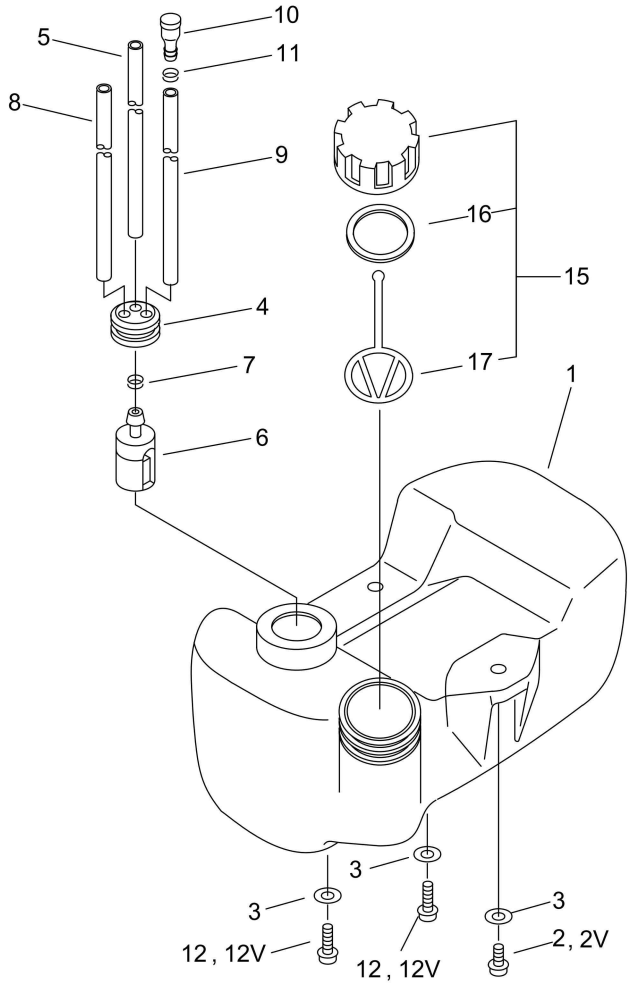

Copyright © 2020 YAMABIKO CORPORATION All Right Reserved