RoHS10 Support | REACH Support | CFSI Support

○形状(SHAPE)

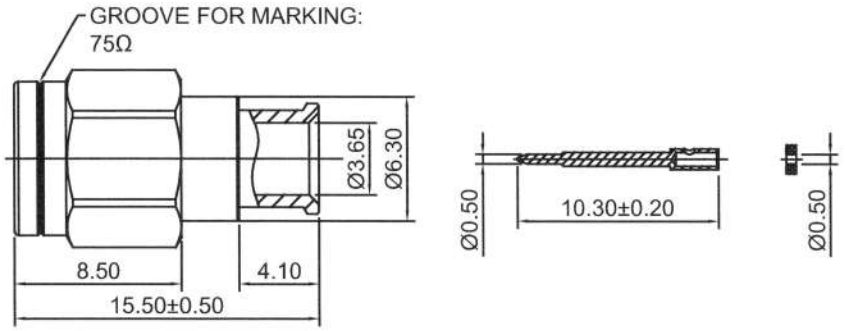

○加工寸法(ASSEMBLY)

RECOMMENDED STRIPPINGED INSTRUCTIONS

INSERT INSULATION INTO THE CABLE

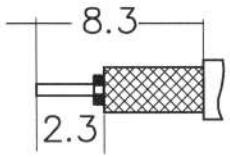

INSERT THE CORE WIRE INTO THE CONNECTOR

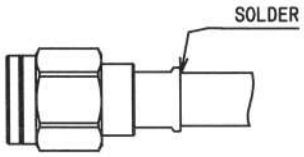

SOLDER TO THE ABOVE

The tolerance in this area is ± 0.10

○仕様 (SPECIFICATION)

1. ELECTRICAL CHARACTERISTICS:
   - 1.1 IMPEDANCE: 75Ω
   - 1.2 FREQUENCY RANGE: DC ~ 18GHz.
   - 1.3 VSWR: 1.3 Max. at 6GHz.
   - 1.4 DIELECTRIC WITHSTANDING VOLTAGE: 1000 VRMS Min.
   - 1.5 INSULATION RESISTANCE: 5000 MEGOHMS Min.
   - 1.6 CONTACT RESISTANCE:
     - 1.6.1 CENTER CONTACT: 5.0 MILLIOHMS Max.
     - 1.6.2 OUTER CONTACT: 2.5 MILLIOHMS Max.
2. MECHANICAL DATA:
   - 2.1 RECOMMENDED COUPLING NUT TORQUE: 0.8 ~ 1.1N.m
3. ENVIRONMENTAL DATA:
   - 3.1 TEMPERATURE RANGE: −65 ~ +165°C

WARNING
DO NOT MATE WITH
SMA 50Ω JACK

No	DESCRIPTION	MATERIAL	FINISH
7	Dielectric	PTFE	NATURE
6	Contact	BRASS	GOLD
5	Dielectric	PTFE	NATURE
4	Body	BRASS	NICKEL
3	C−ring	BeCu	NATURE
2	Gasket	S.I.R	NATURE
1	Coupling Nut	BRASS	NICKEL

TOLERANCE
DECIMALS .XX ±0.10 .X ±0.15
DIAMETER .X ±0.10

Approved	Checked	Drawn	Unit
エレパーツ '25.08.20 大江	エレパーツ '25.08.20 森井	エレパーツ '25.08.20 大江	mm
			A4

日本エレパーツ株式会社
NIHON ELEPARTS Co.,LTD

NAME	REV
SMA-PS-141C	1