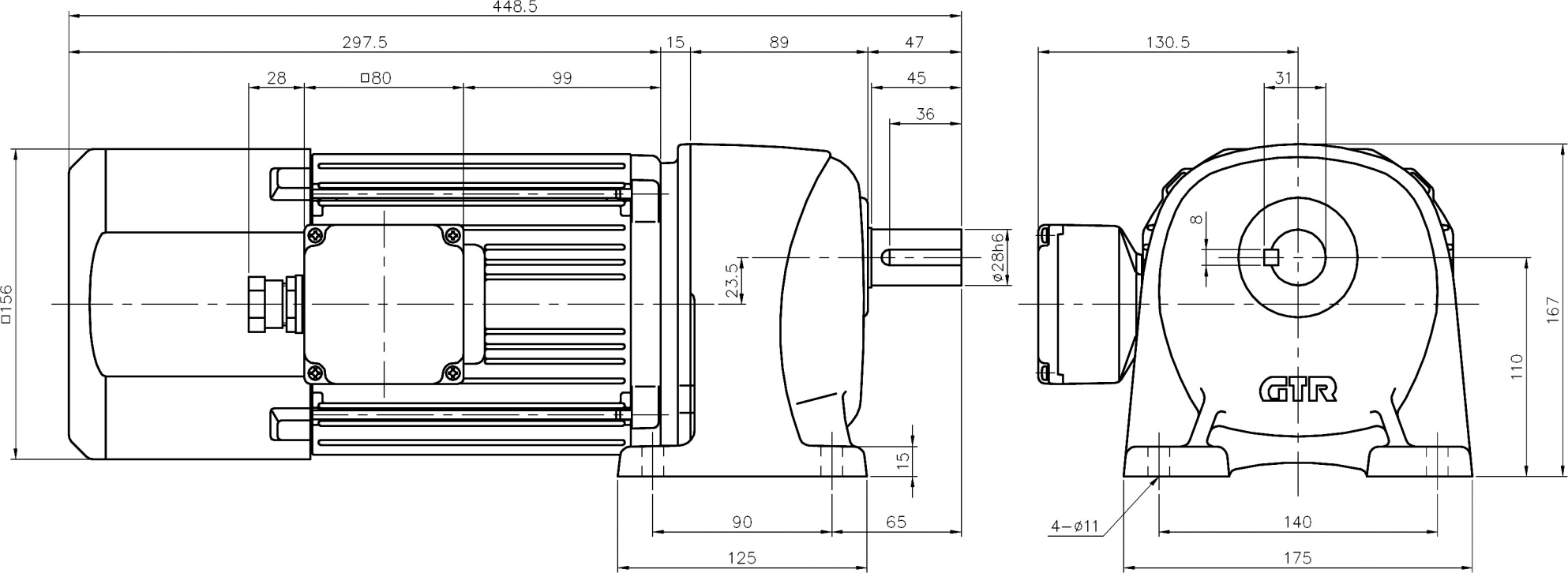
448.5
297.5
15
89
47
28
□80
99
45
36
□156
23.5
ø28h6
15
90
65
125
130.5
31
8
167
110
GTR
4−ø11
140
175