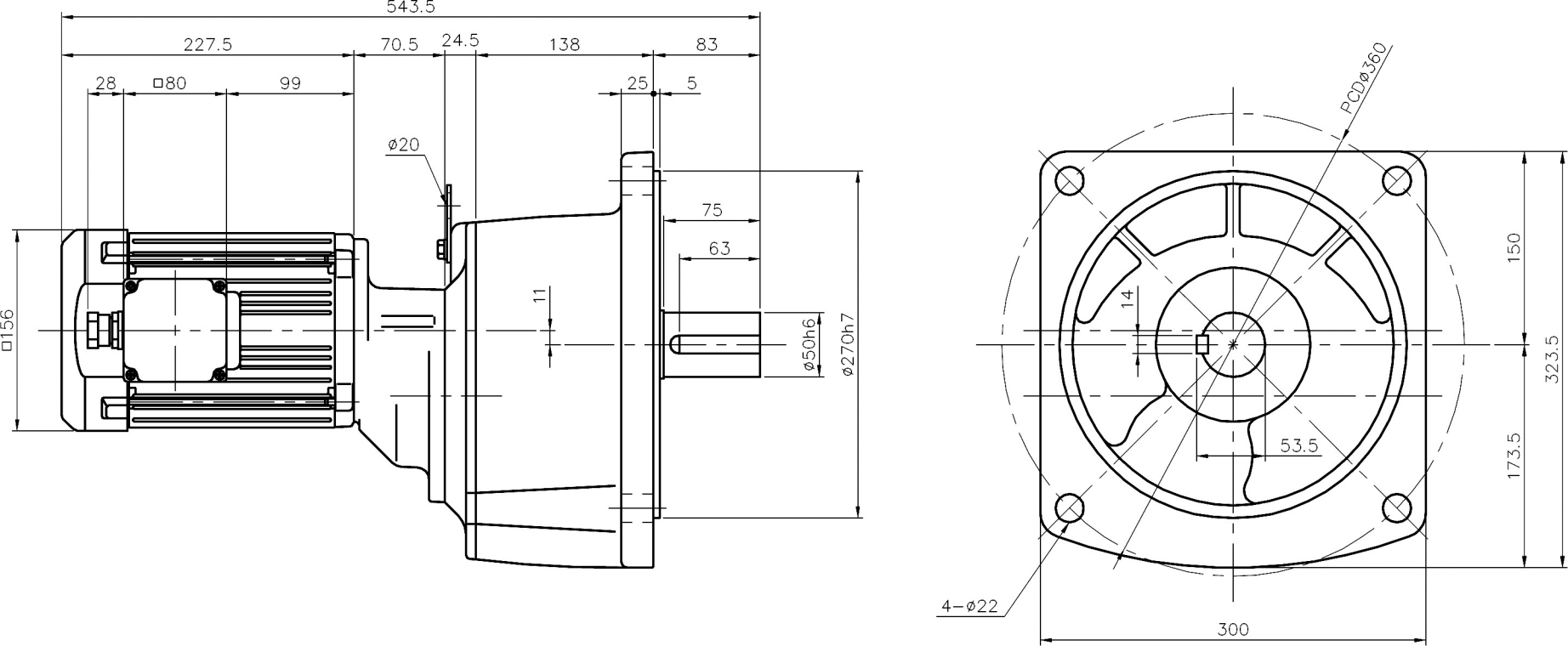
543.5
227.5
70.5
24.5
138
83
28
□80
99
25
5
ø20
75
63
11
□156
ø50h6
ø270h7
PCDø360
14
150
323.5
173.5
53.5
4-ø22
300