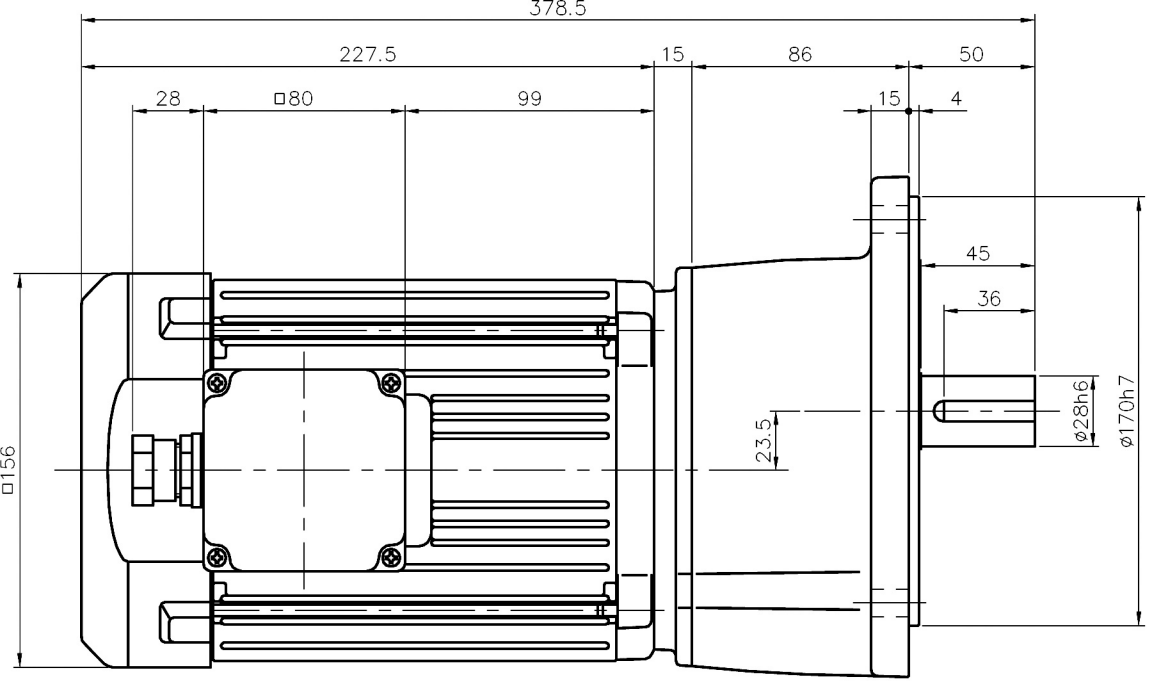
378.5
227.5
15
86
50
28
□80
99
15
4
45
36
□156
23.5
ø28h6
ø170h7

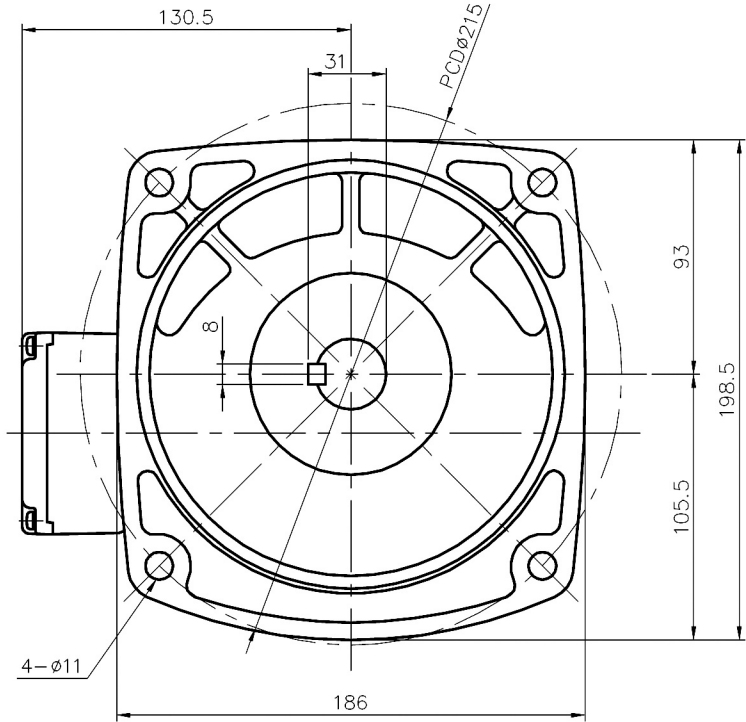
130.5
31
PCDø215
93
8
198.5
105.5
4−ø11
186