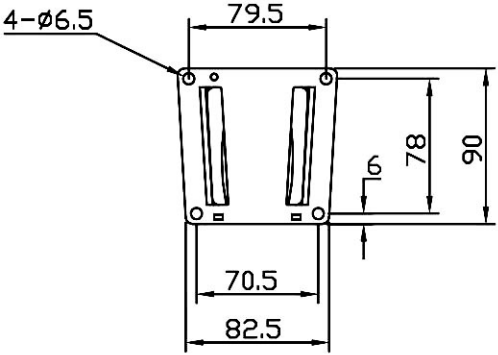
4-ø6.5
79.5
78
90
6
70.5
82.5

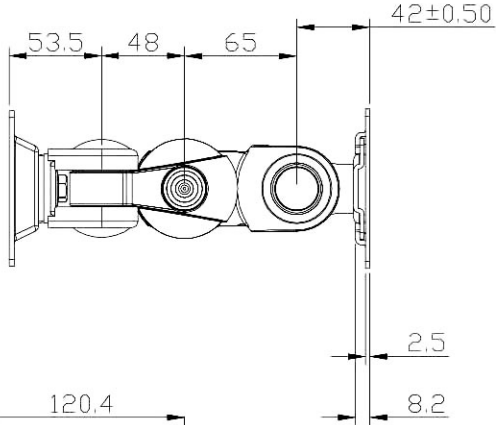
42±0.50
53.5
48
65
2.5
8.2

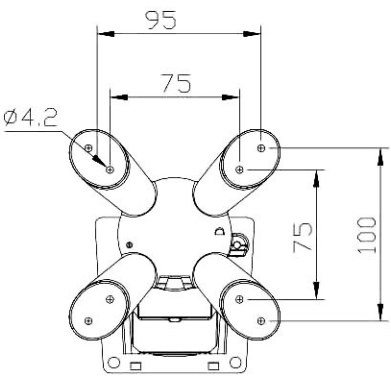
95
75
ø4.2
75
100

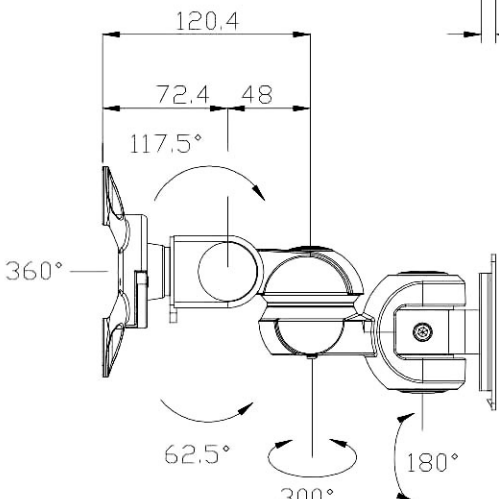
120.4
72.4
48
117.5°
360°
62.5°
300°
180°