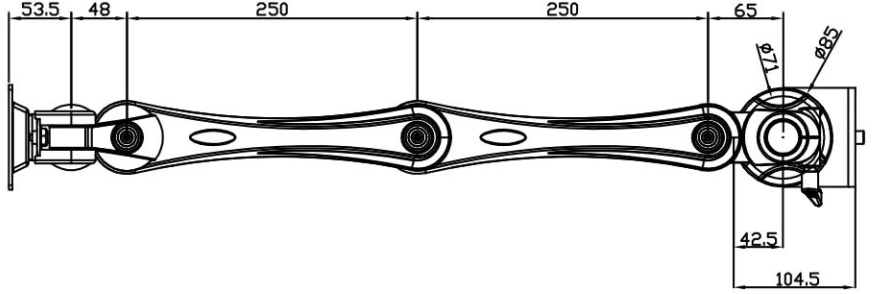
53.5
48
250
250
65
ø71
ø85
42.5
104.5

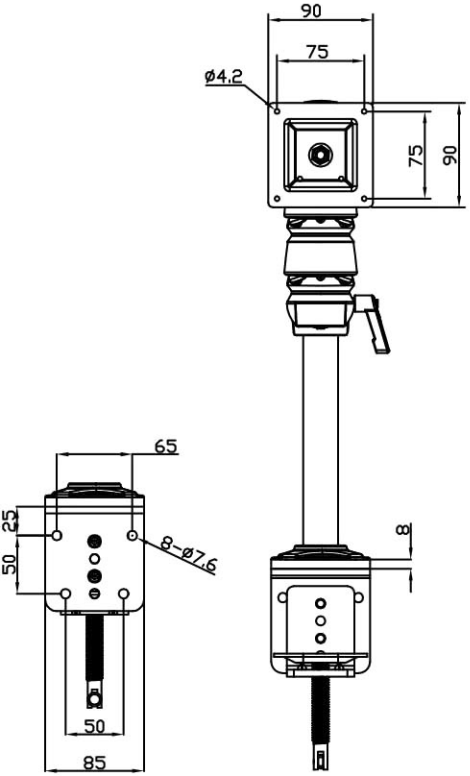
90
75
ø4.2
75
90
8
65
25
50
8-ø7.6
50
85

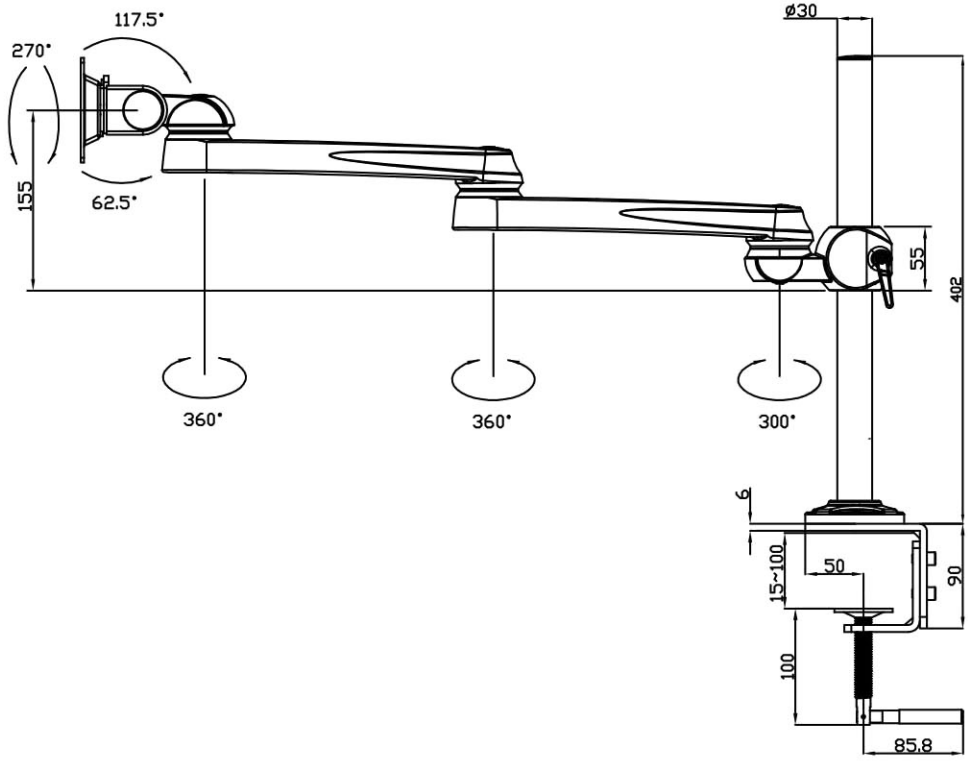
117.5°
270°
62.5°
155
360°
360°
300°
ø30
55
402
6
15~100
50
90
100
85.8