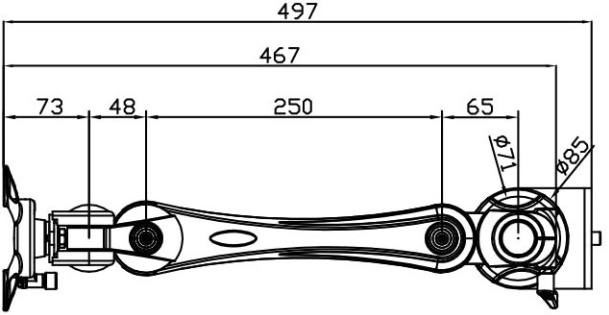
497
467
73
48
250
65
17ø
ø85

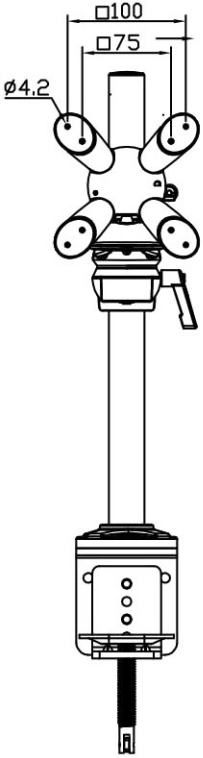
□100
□75
ø4.2

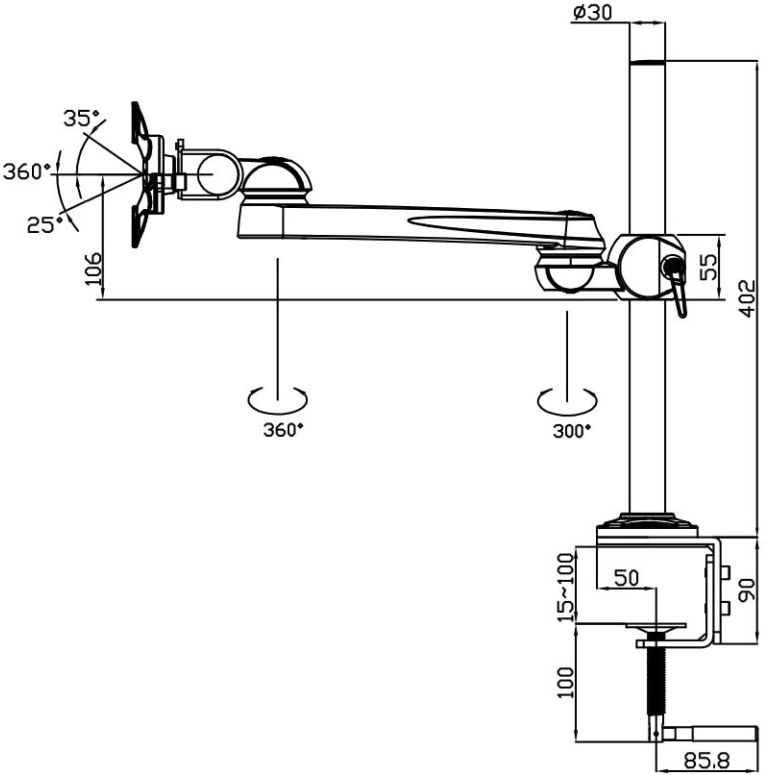
ø30
35°
360°
25°
106
55
402
360°
300°
15~100
50
90
100
85.8