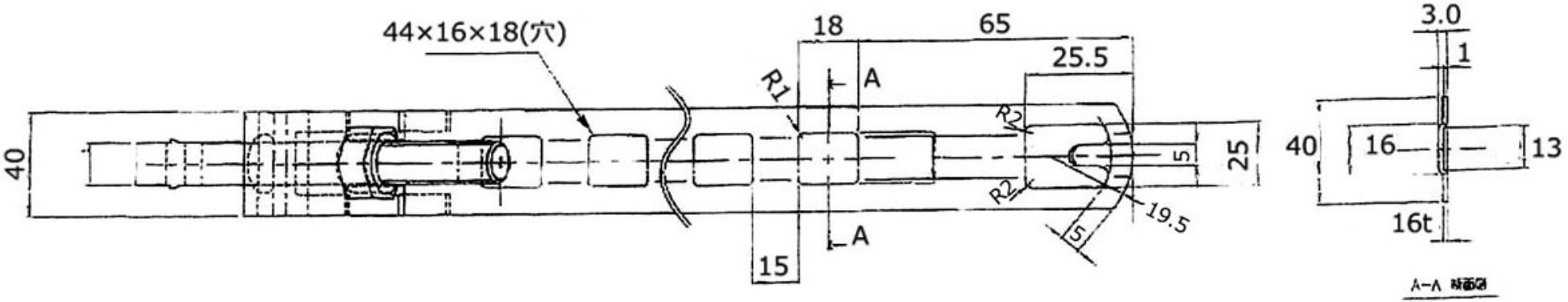
44×16×18(穴)
18
65
25.5
R1
A
R2
R2
5
25
40
19.5
5
A
15
3.0
1
40
16
13
16t

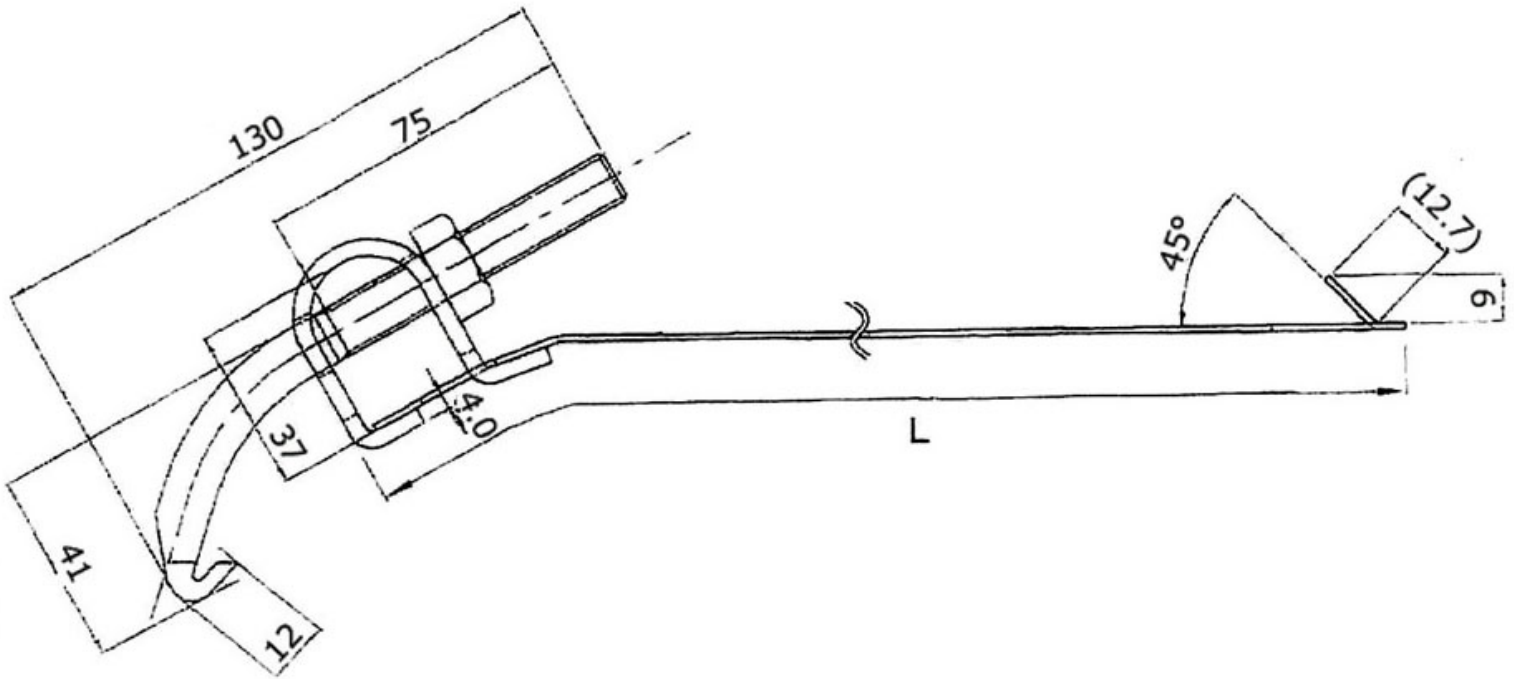
130
75
45°
(12.7)
9
37
4.0
L
41
12