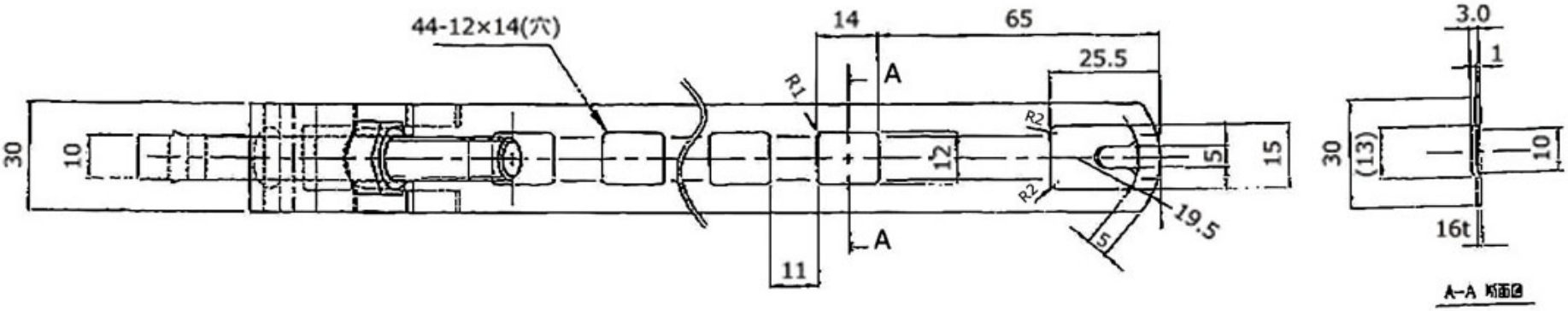
44-12×14(穴)
14
65
25.5
3.0
1
A
R1
R2
R2
30
10
12
5
15
30
(13)
10
19.5
5
A
11
16t
A-A 断面図

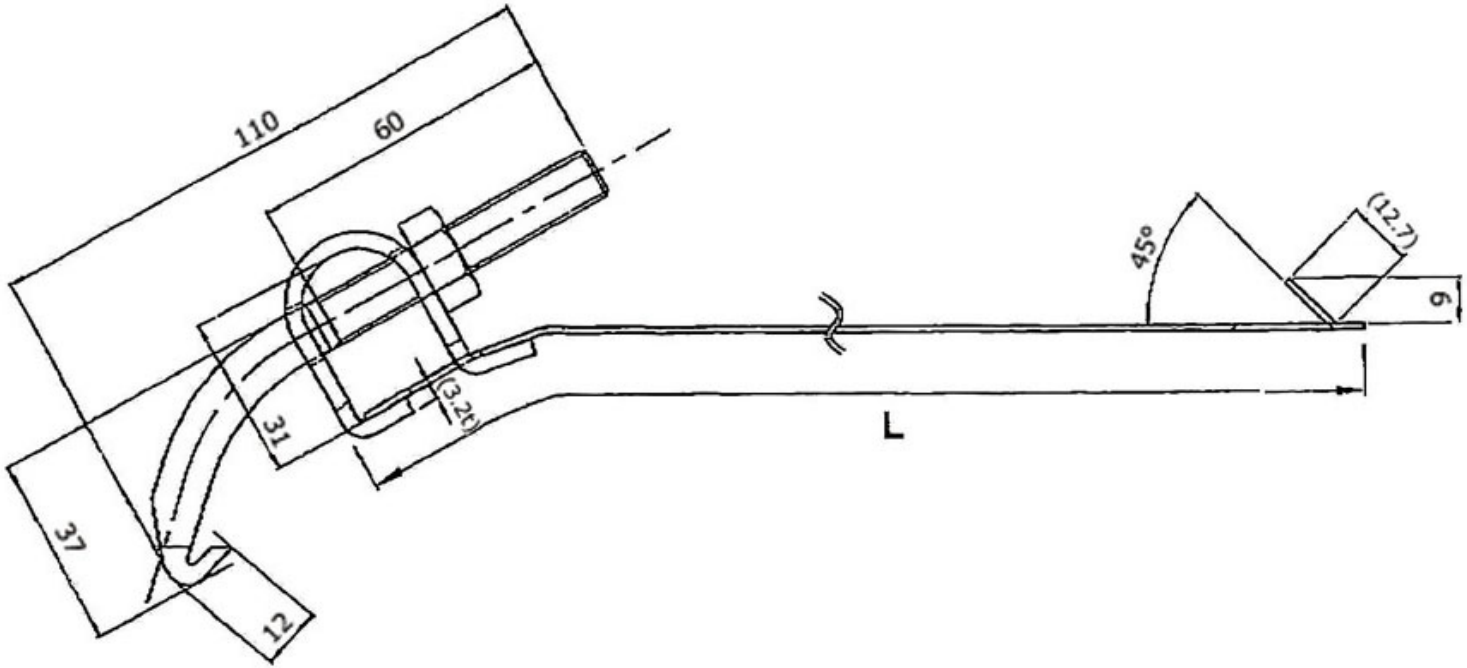
110
60
45°
(12.7)
6
(3.2t)
31
L
37
12