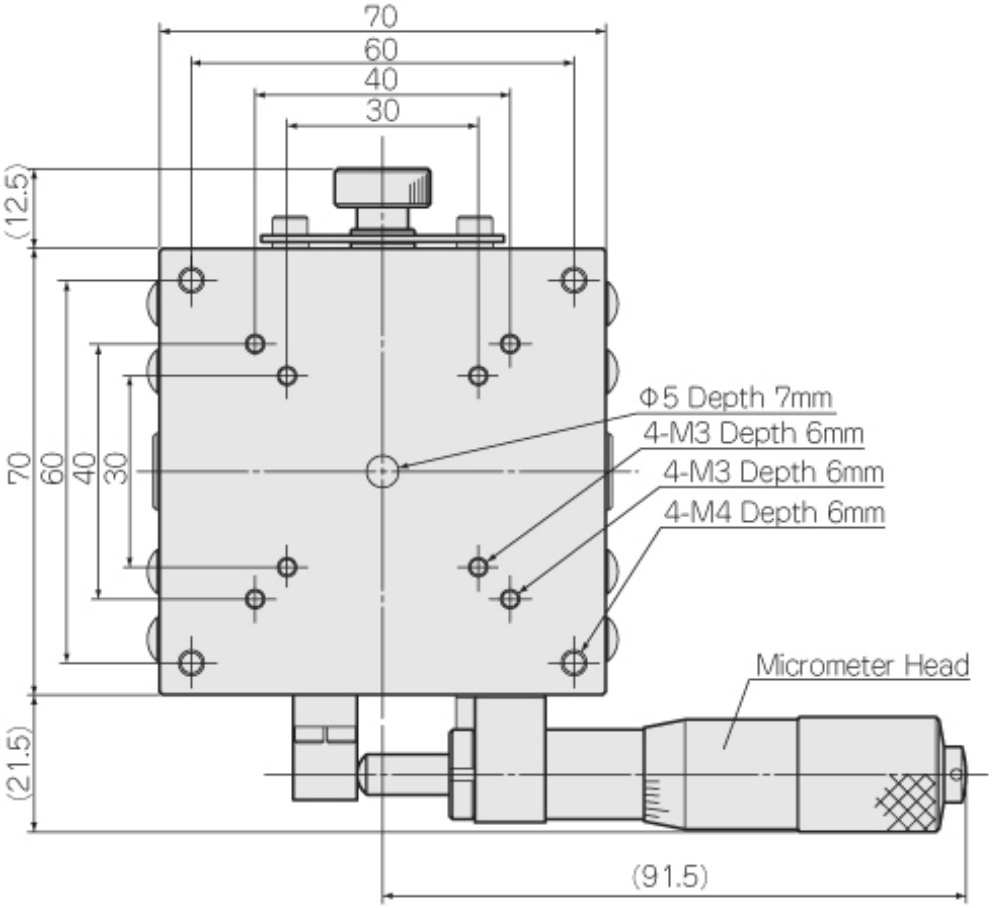
70
60
40
30
(12.5)
70
60
40
30
Φ5 Depth 7mm
4-M3 Depth 6mm
4-M3 Depth 6mm
4-M4 Depth 6mm
Micrometer Head
(21.5)
(91.5)

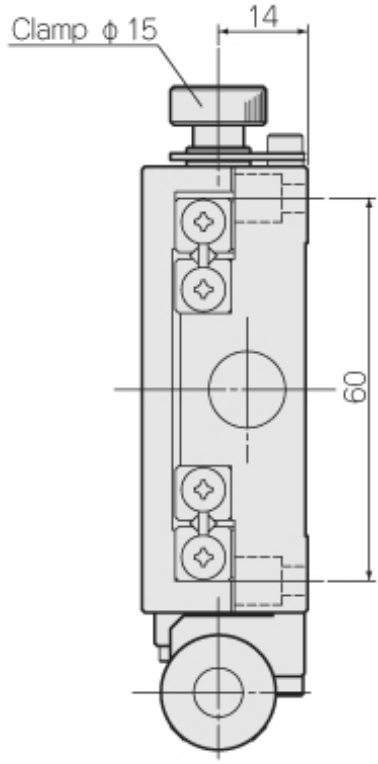
Clamp φ15
14
60

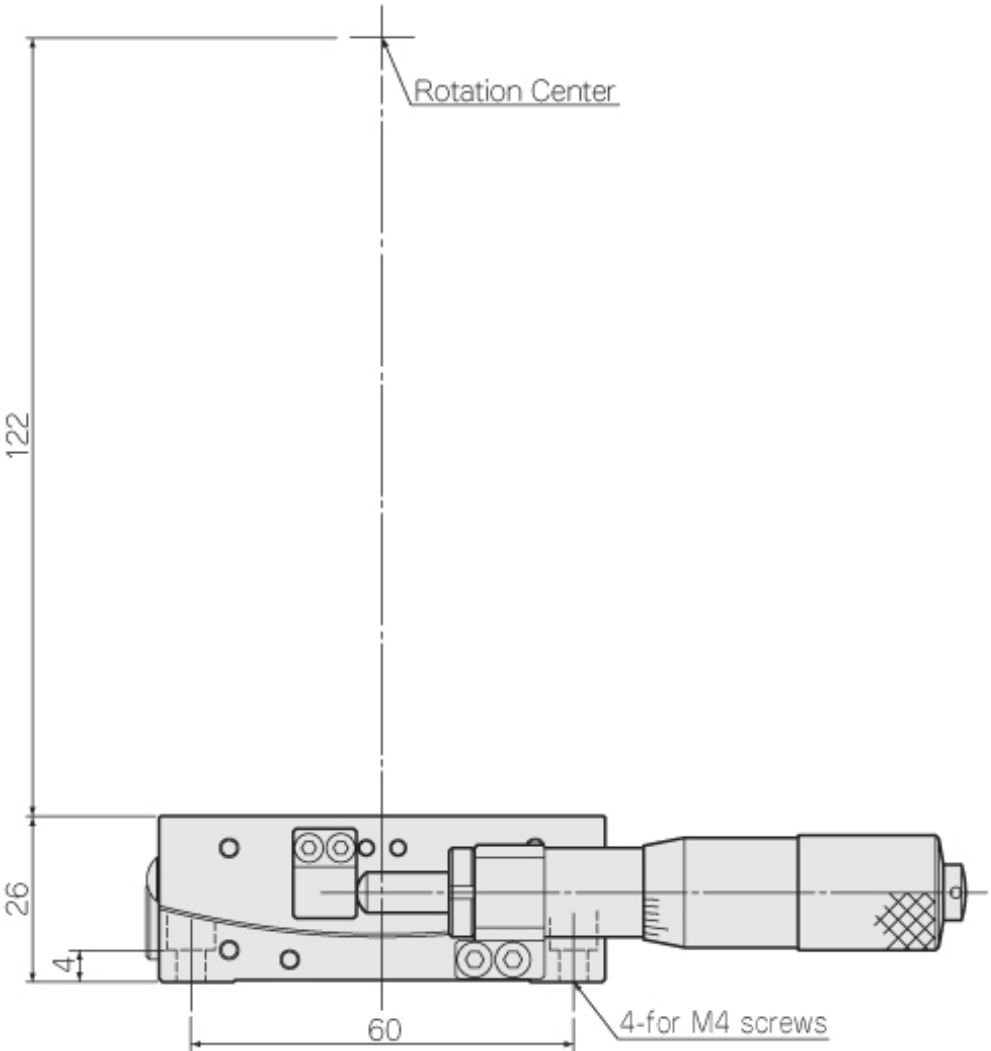
Rotation Center
122
26
4
60
4-for M4 screws