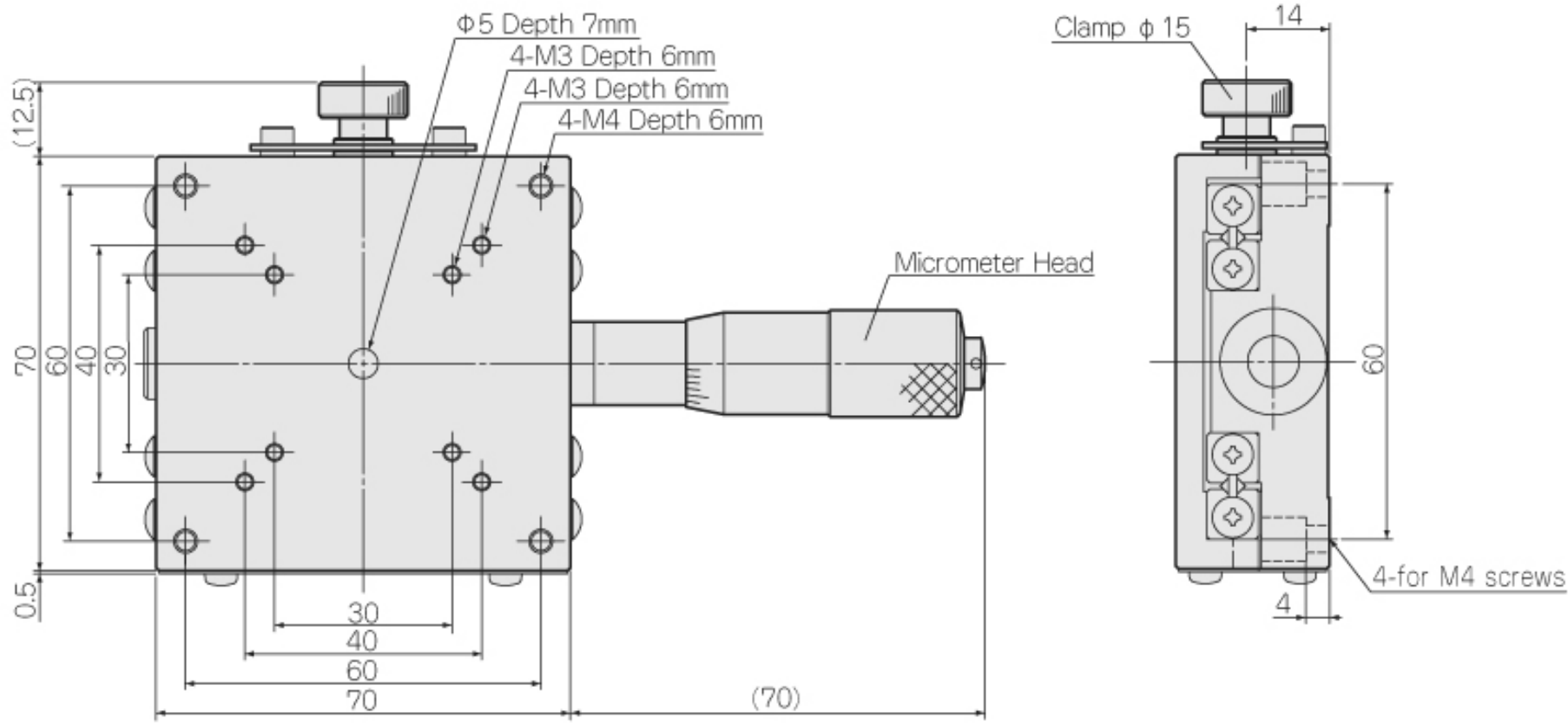
Φ5 Depth 7mm
4-M3 Depth 6mm
4-M3 Depth 6mm
4-M4 Depth 6mm
Micrometer Head
Clamp φ15
14
(12.5)
70
60
40
30
0.5
30
40
60
70
(70)
60
4-for M4 screws
4

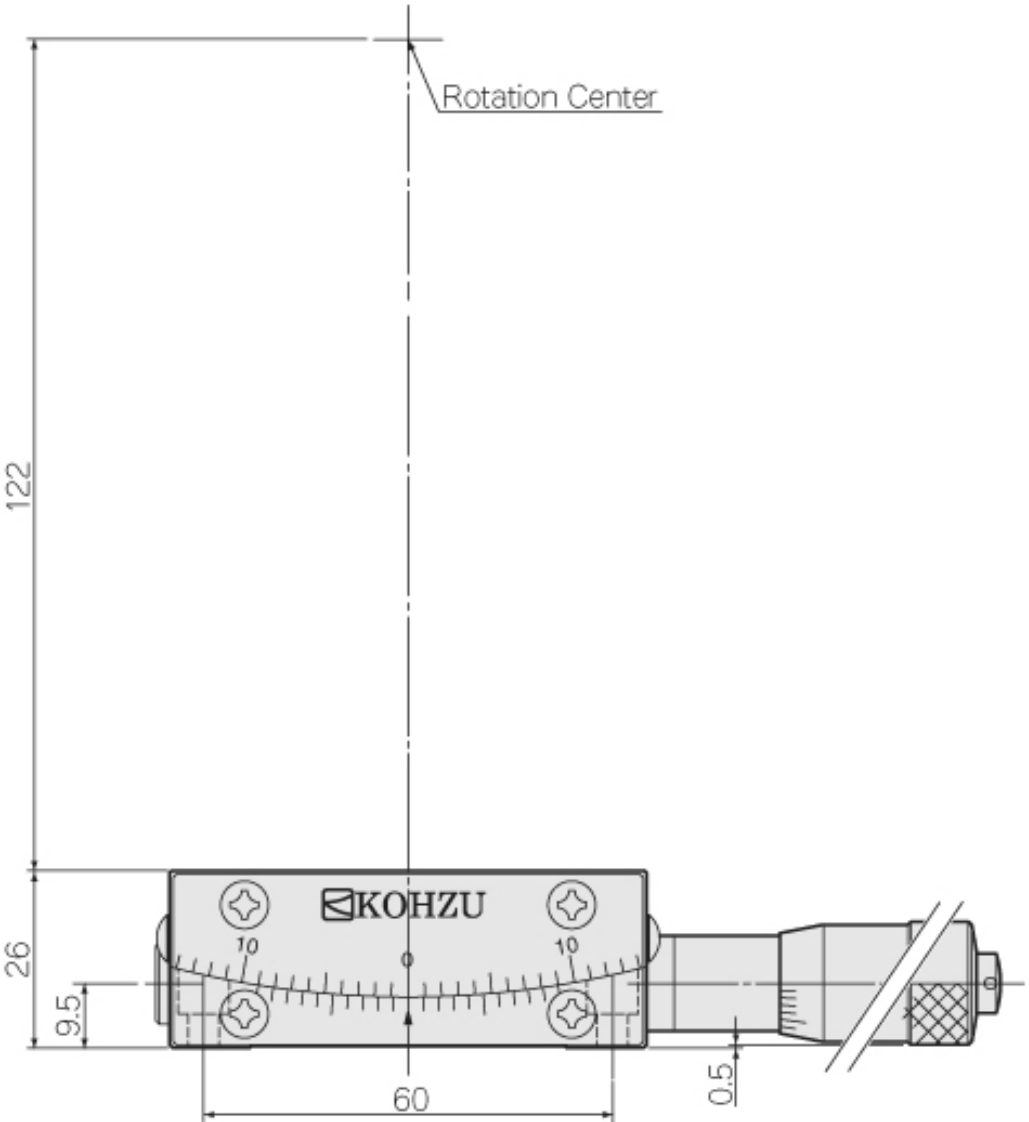
Rotation Center
122
26
9.5
KOHZU
10
0
10
60
0.5