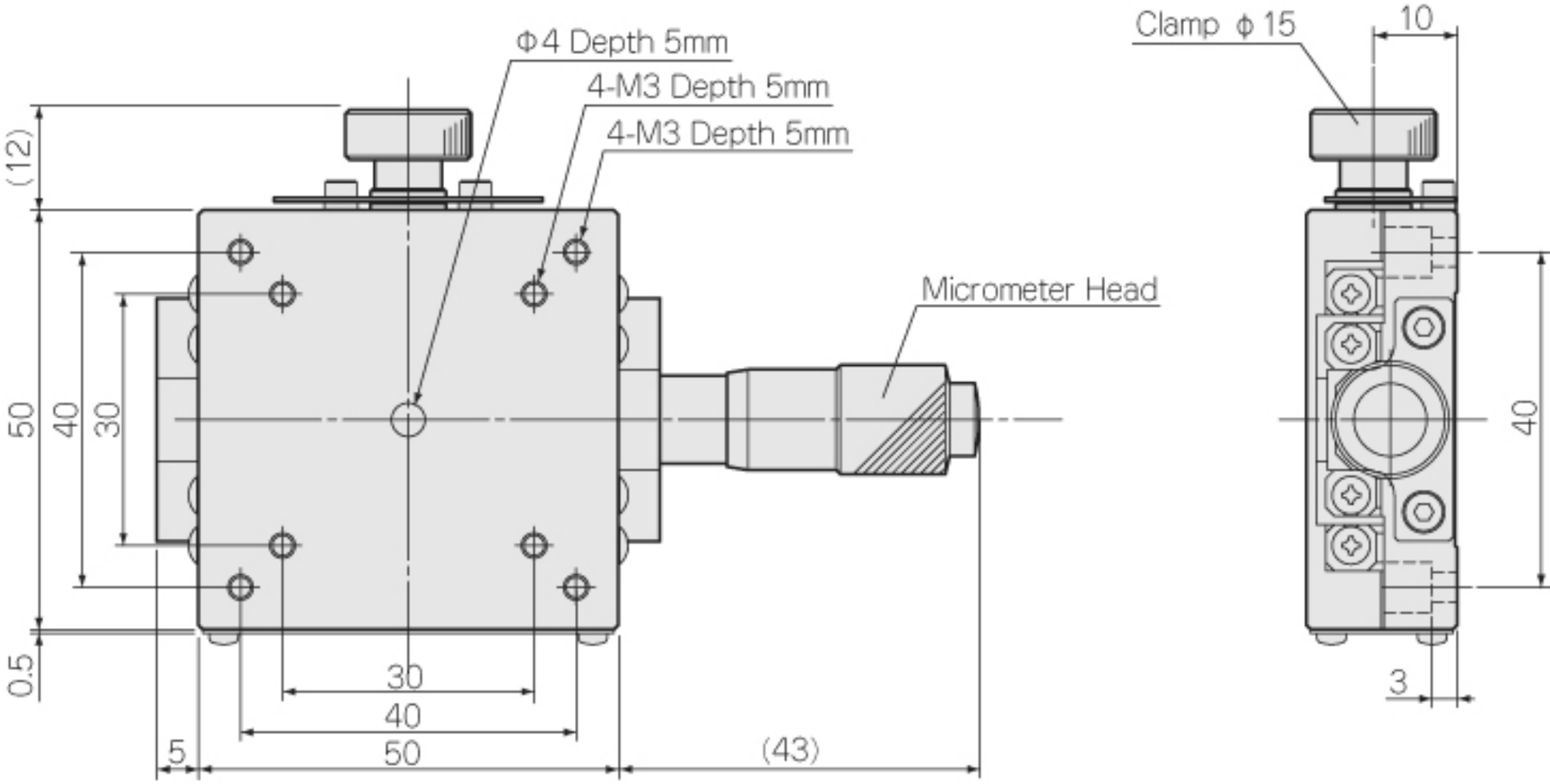
Φ4 Depth 5mm
4-M3 Depth 5mm
4-M3 Depth 5mm
Micrometer Head
Clamp φ15
10
(12)
50
40
30
0.5
30
40
5
50
(43)
40
3

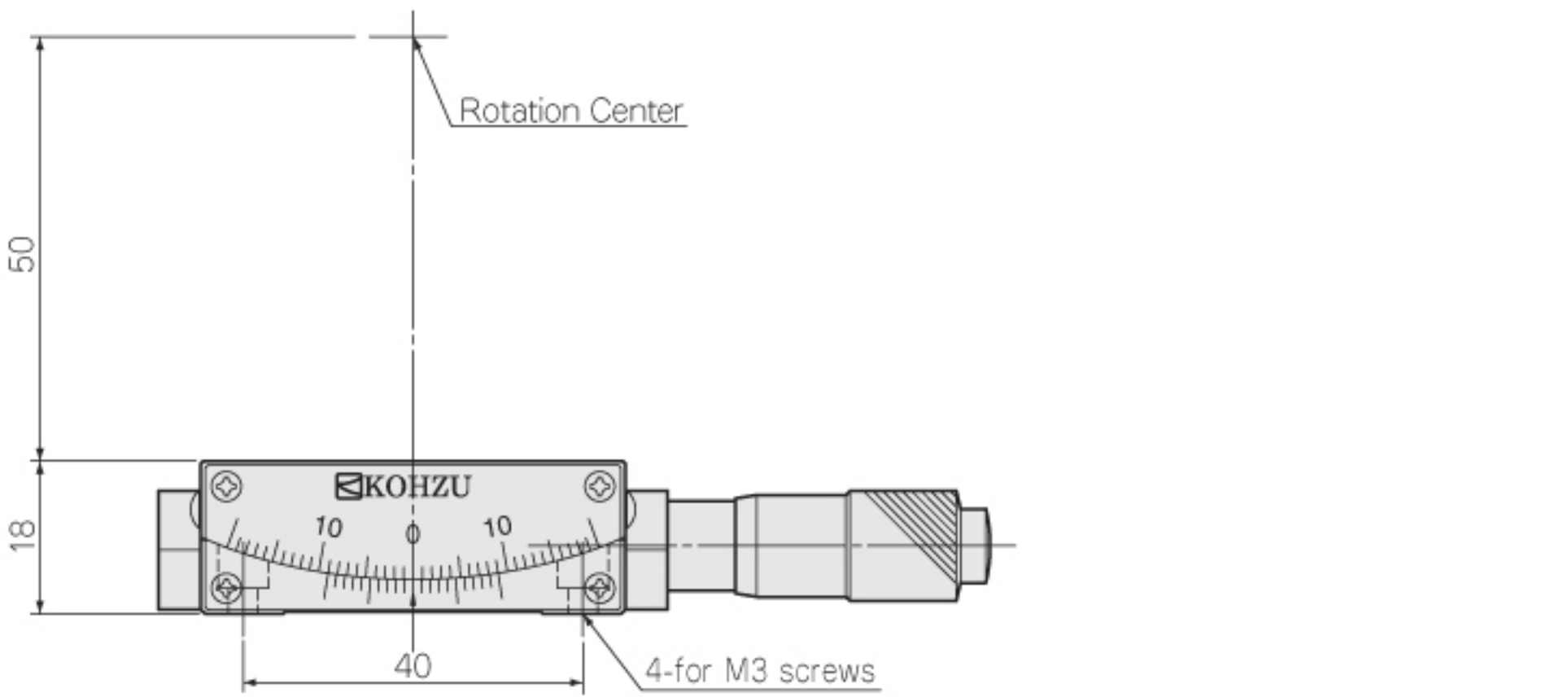
Rotation Center
50
18
KOHZU
10
0
10
40
4-for M3 screws