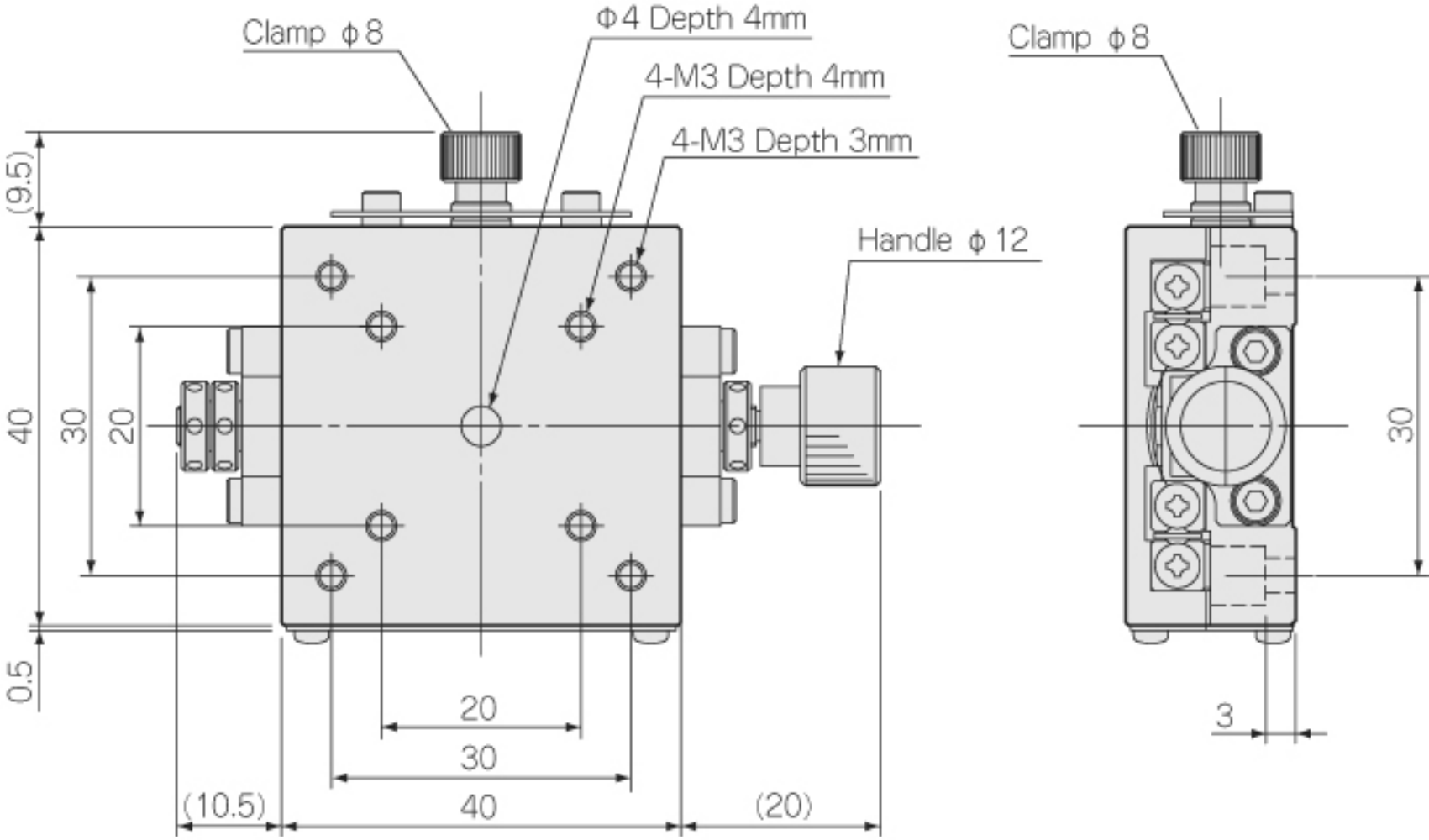
Clamp φ8
Φ4 Depth 4mm
4-M3 Depth 4mm
4-M3 Depth 3mm
Handle φ12
Clamp φ8
(9.5)
40
30
20
0.5
20
30
(10.5)
40
(20)
30
3

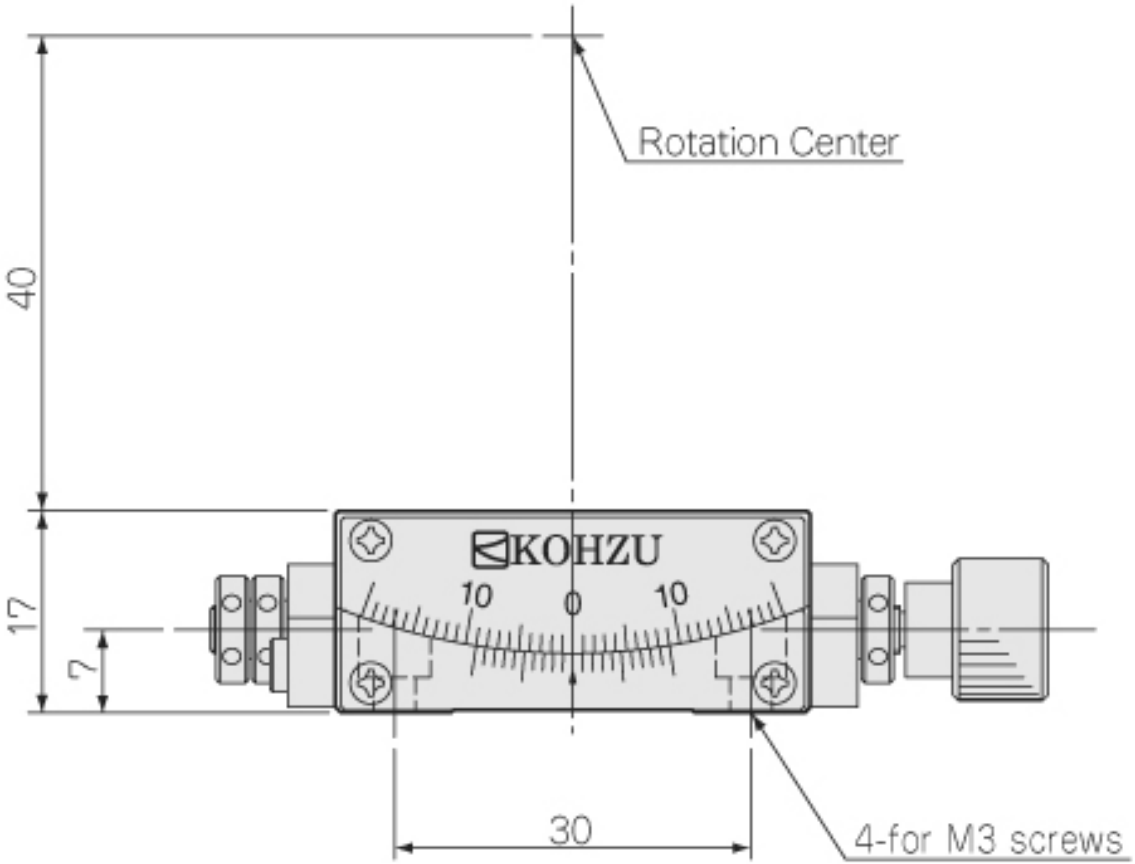
Rotation Center
40
17
7
KOHZU
10
0
10
30
4-for M3 screws