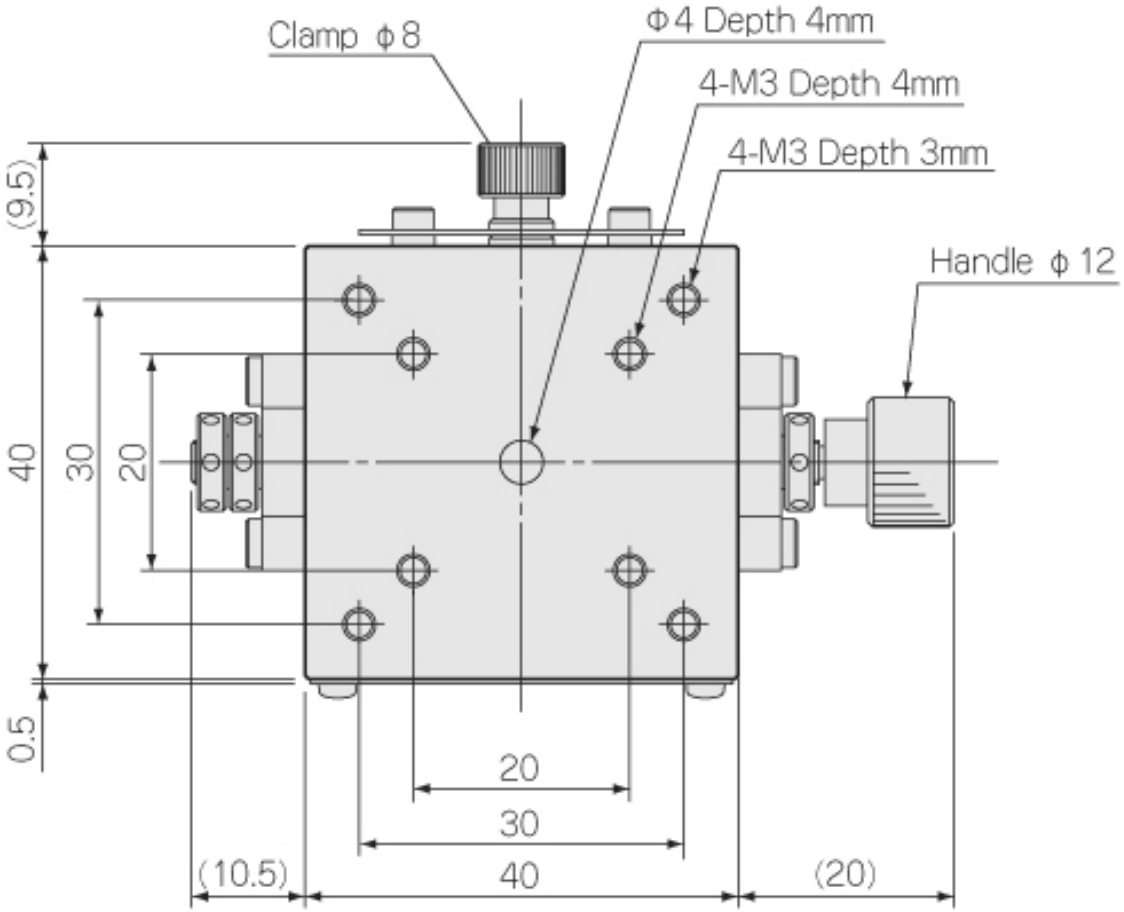
Clamp ϕ8
Φ4 Depth 4mm
4-M3 Depth 4mm
4-M3 Depth 3mm
Handle ϕ12
(9.5)
40
30
20
0.5
20
30
(10.5)
40
(20)

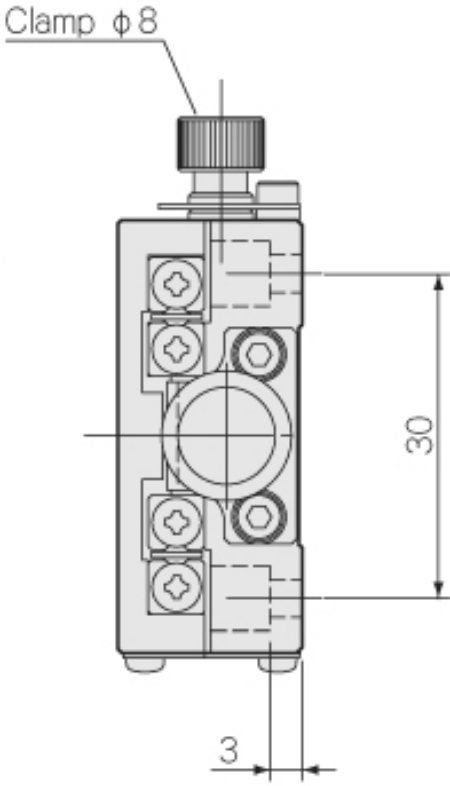
Clamp ϕ8
30
3

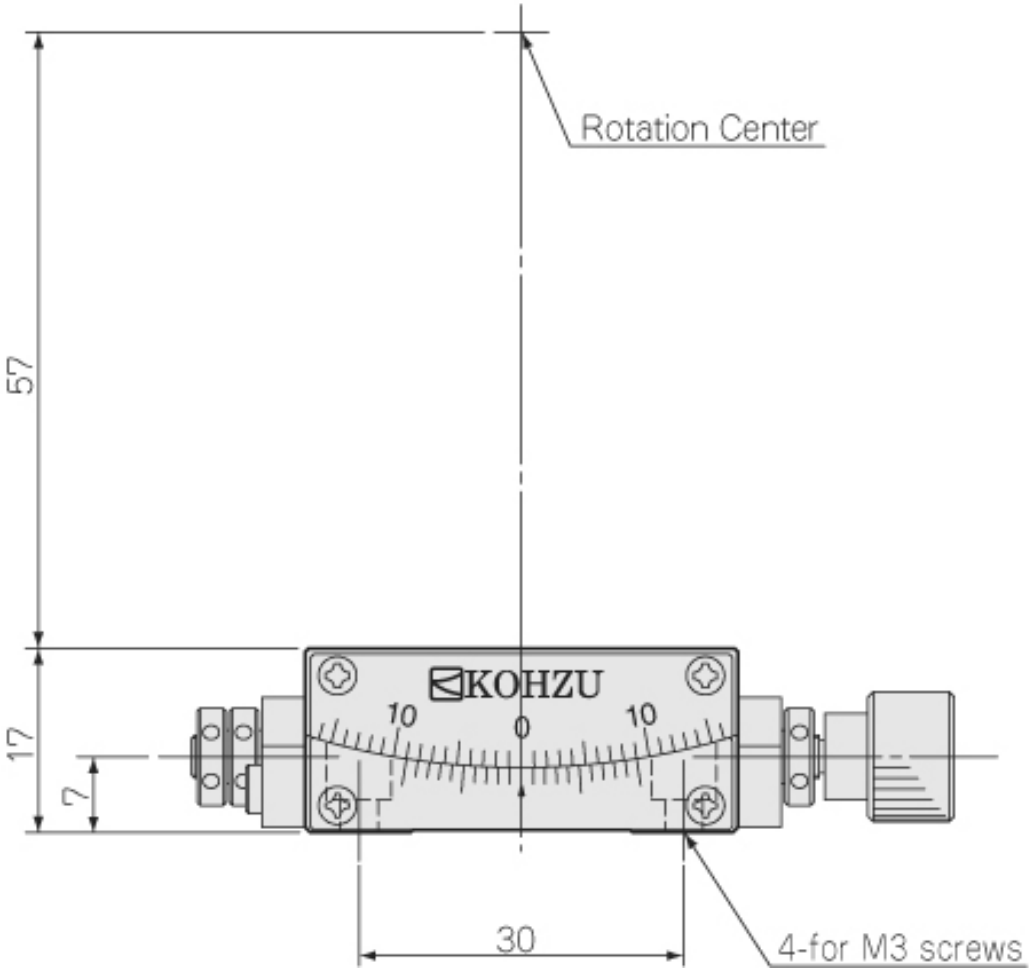
Rotation Center
57
KOHZU
10
0
10
17
7
30
4-for M3 screws