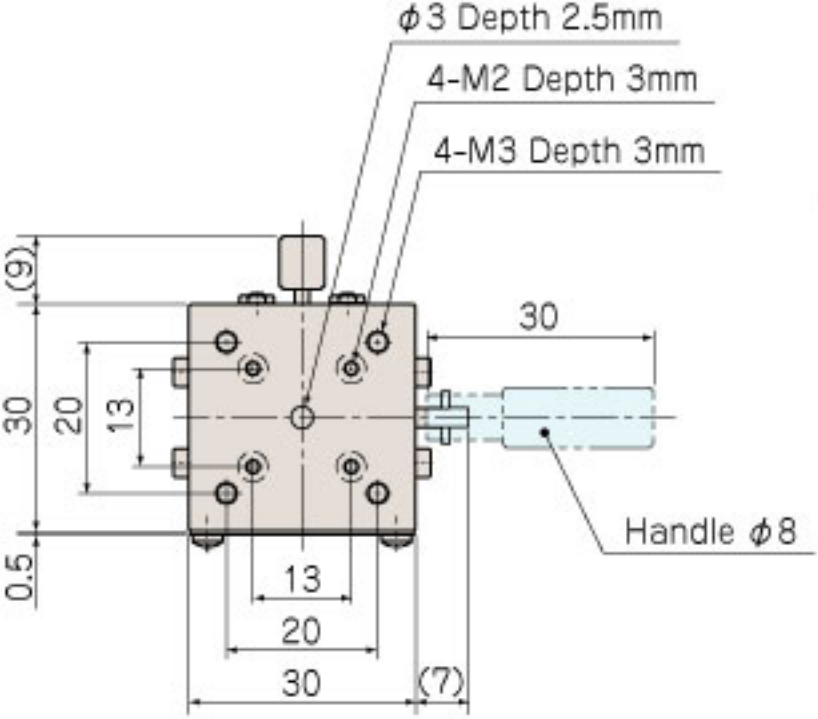
ϕ3 Depth 2.5mm
4-M2 Depth 3mm
4-M3 Depth 3mm
(9)
30
20
13
0.5
30
13
20
30
(7)
Handle ϕ8

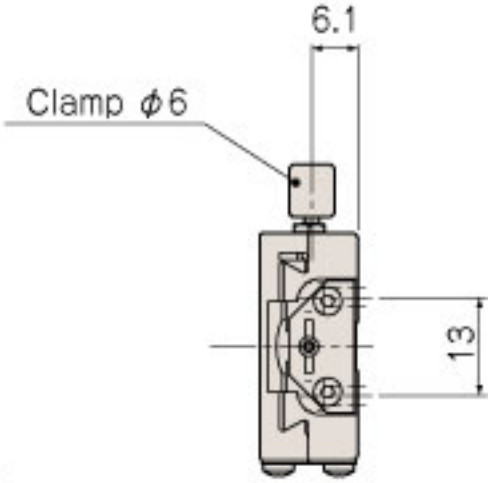
6.1
Clamp ϕ6
13

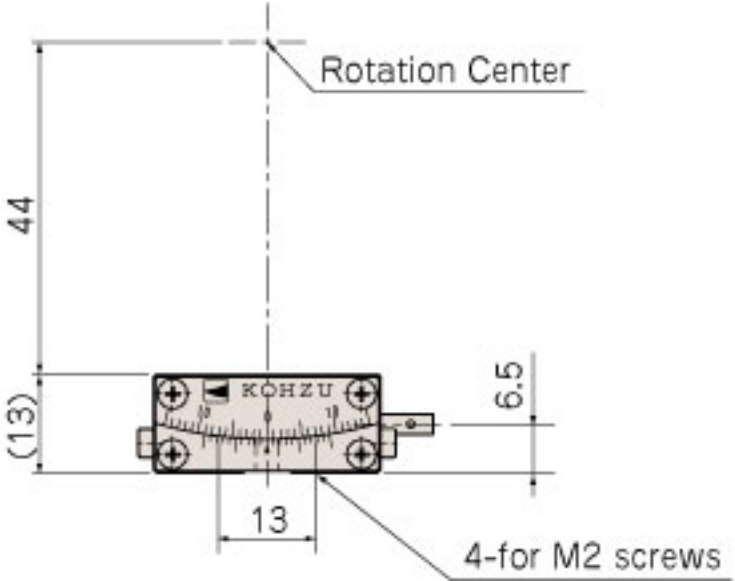
Rotation Center
44
(13)
KOHZU
6.5
13
4-for M2 screws