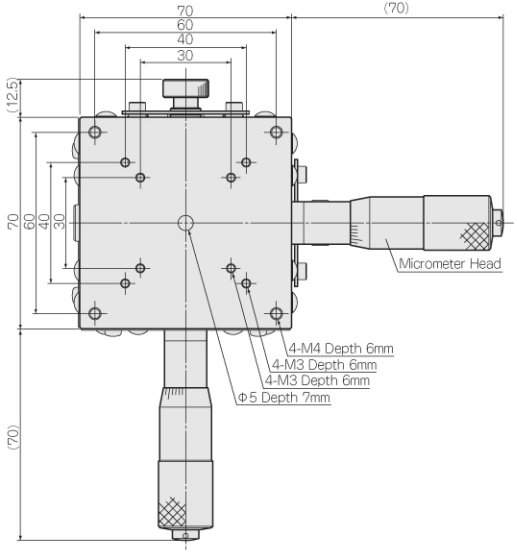
70
60
40
30
(70)
(12.5)
70
60
40
30
(70)
Micrometer Head
4-M4 Depth 6mm
4-M3 Depth 6mm
4-M3 Depth 6mm
Φ5 Depth 7mm

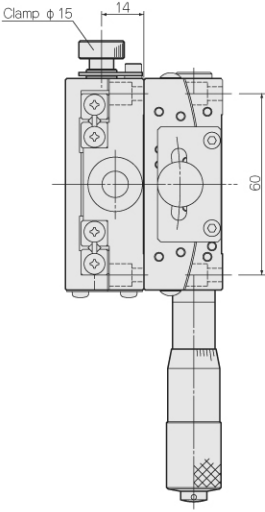
Clamp φ15
14
60

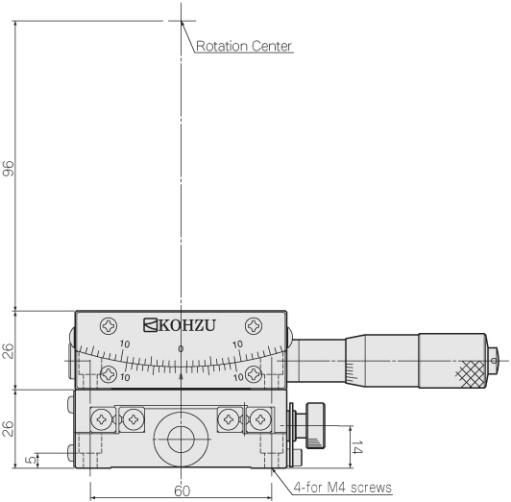
Rotation Center
96
26
26
5
14
60
4-for M4 screws
KOHZU
10
0
10
10
10