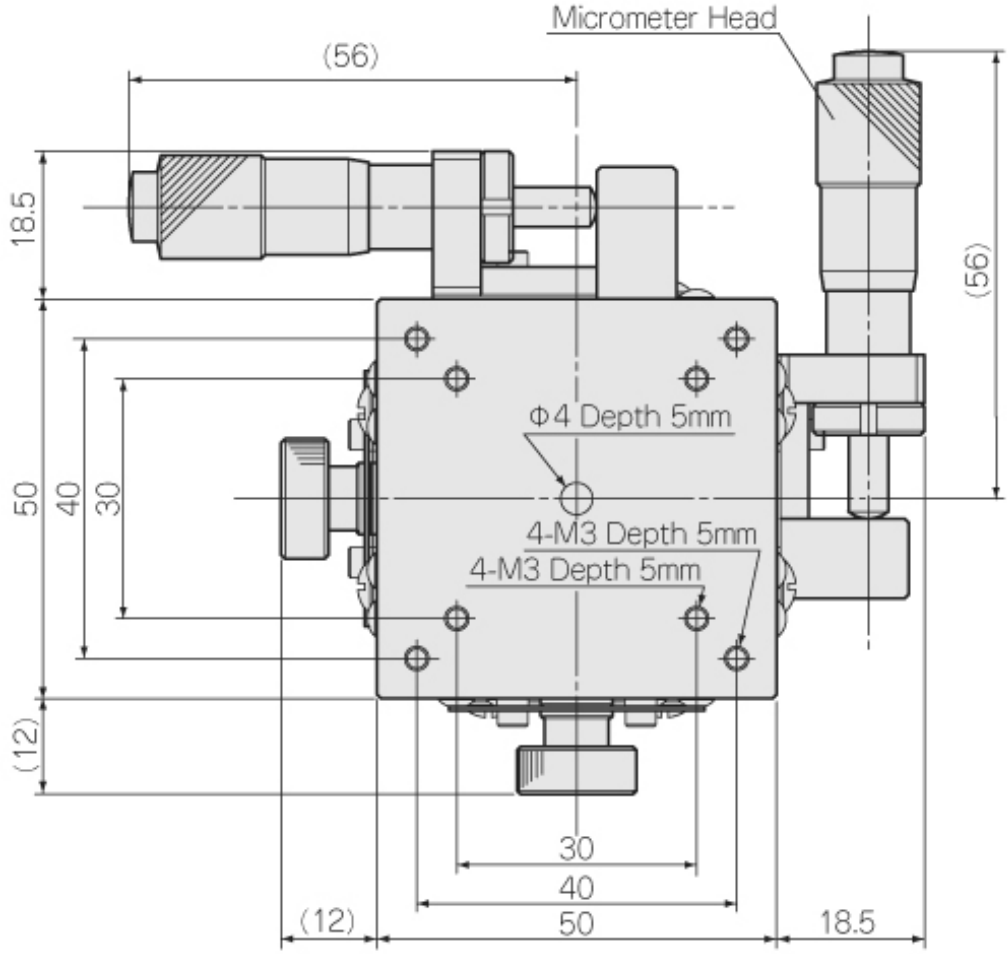
Micrometer Head
(56)
18.5
(56)
Φ4 Depth 5mm
50
40
30
4-M3 Depth 5mm
4-M3 Depth 5mm
(12)
30
40
(12)
50
18.5

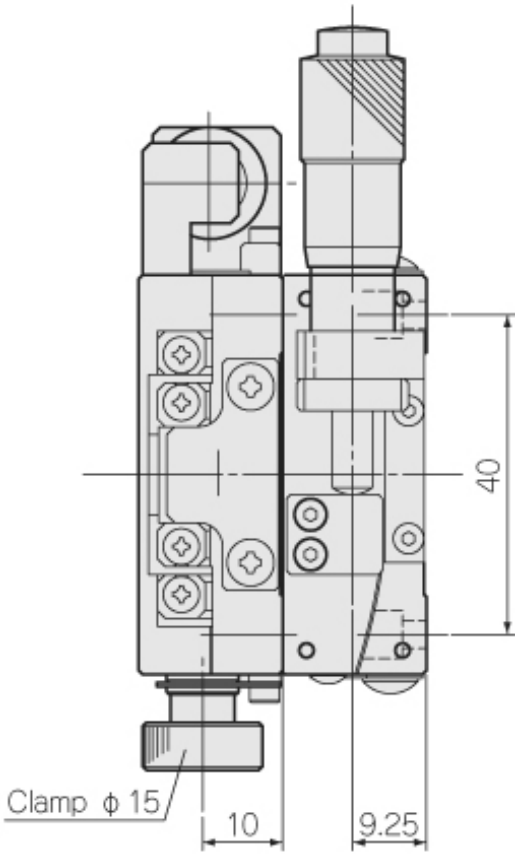
40
Clamp ϕ 15
10
9.25

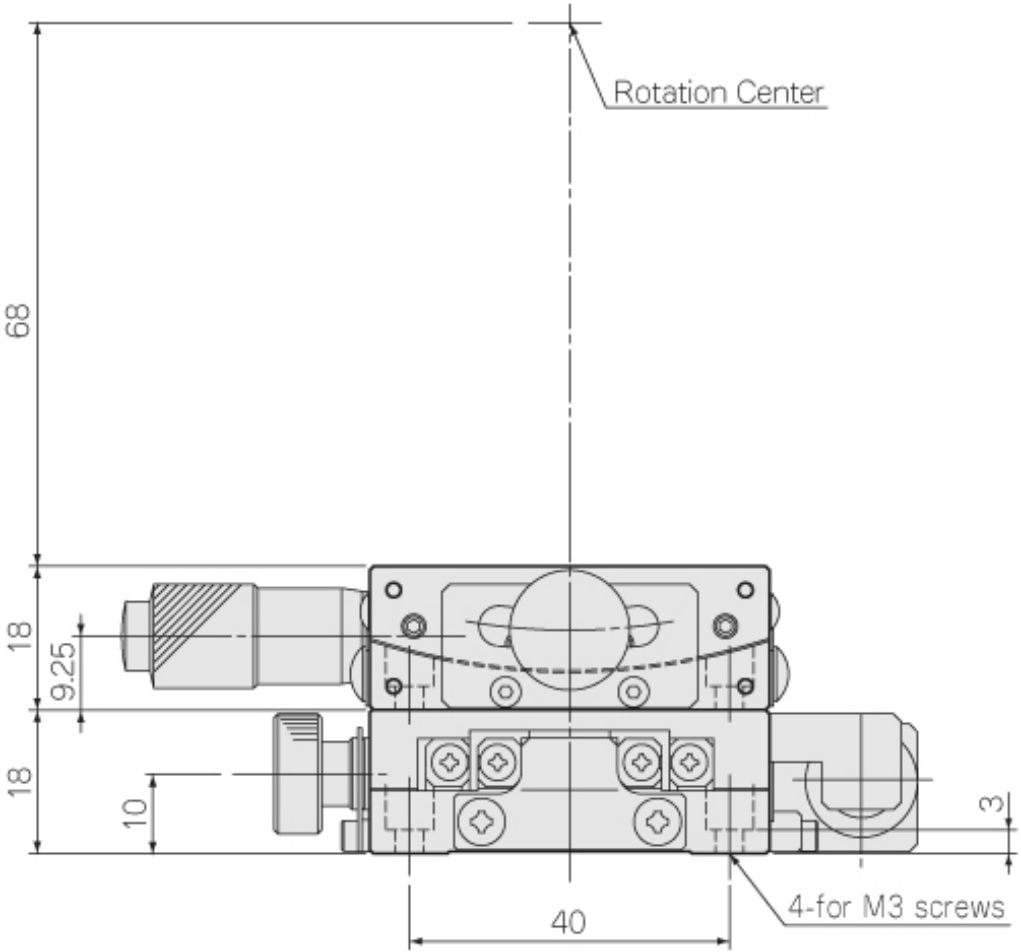
Rotation Center
68
18
9.25
18
10
3
40
4-for M3 screws