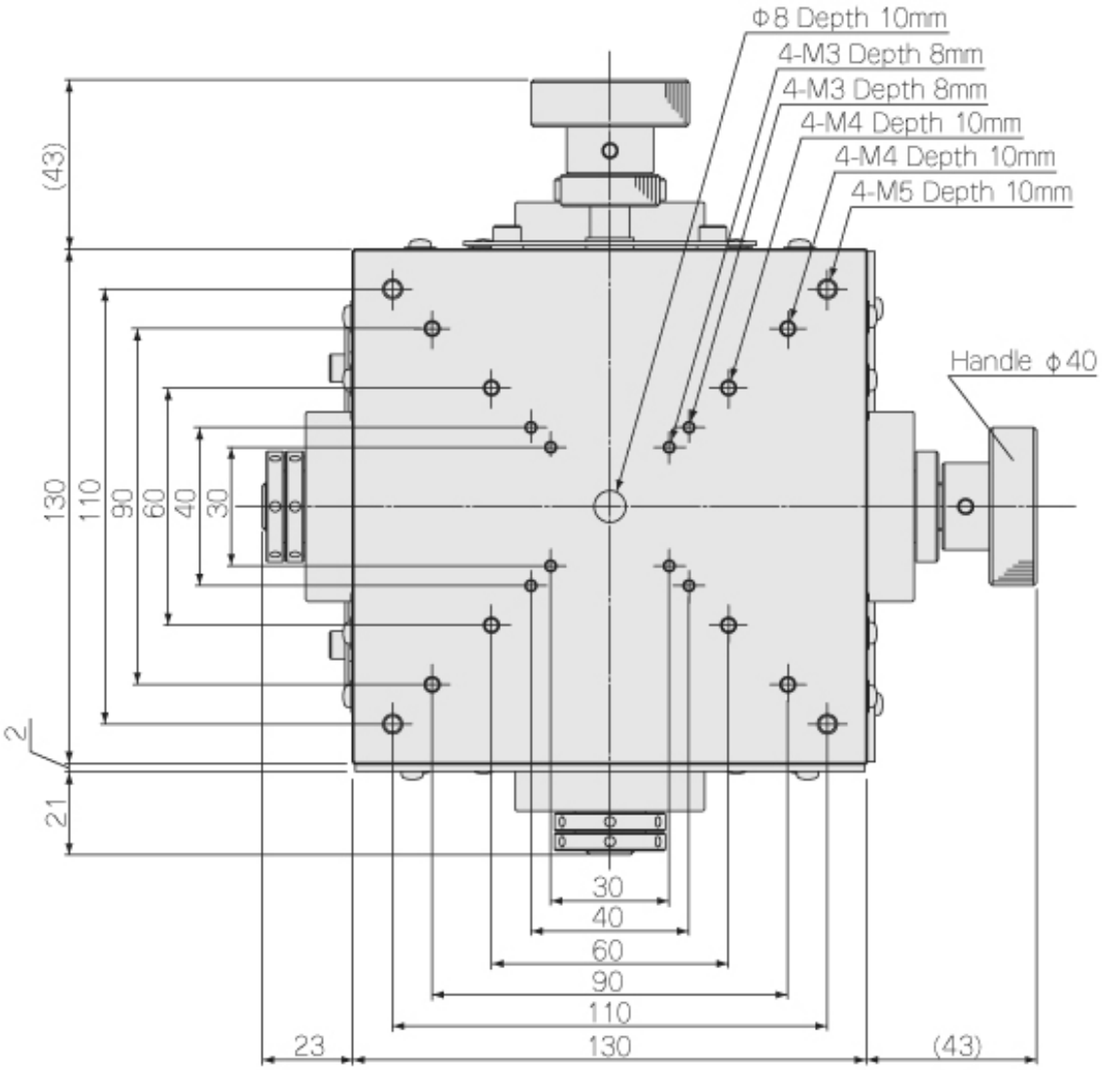
Φ8 Depth 10mm
4-M3 Depth 8mm
4-M3 Depth 8mm
4-M4 Depth 10mm
4-M4 Depth 10mm
4-M5 Depth 10mm
Handle φ40
(43)
130
110
90
60
40
30
2
21
30
40
60
90
110
23
130
(43)

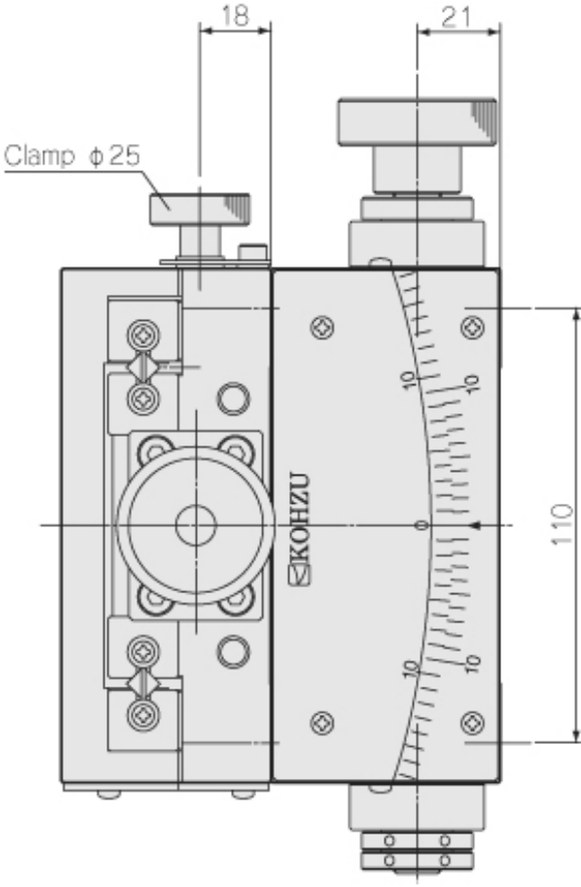
18
21
Clamp φ25
KOHZU
110

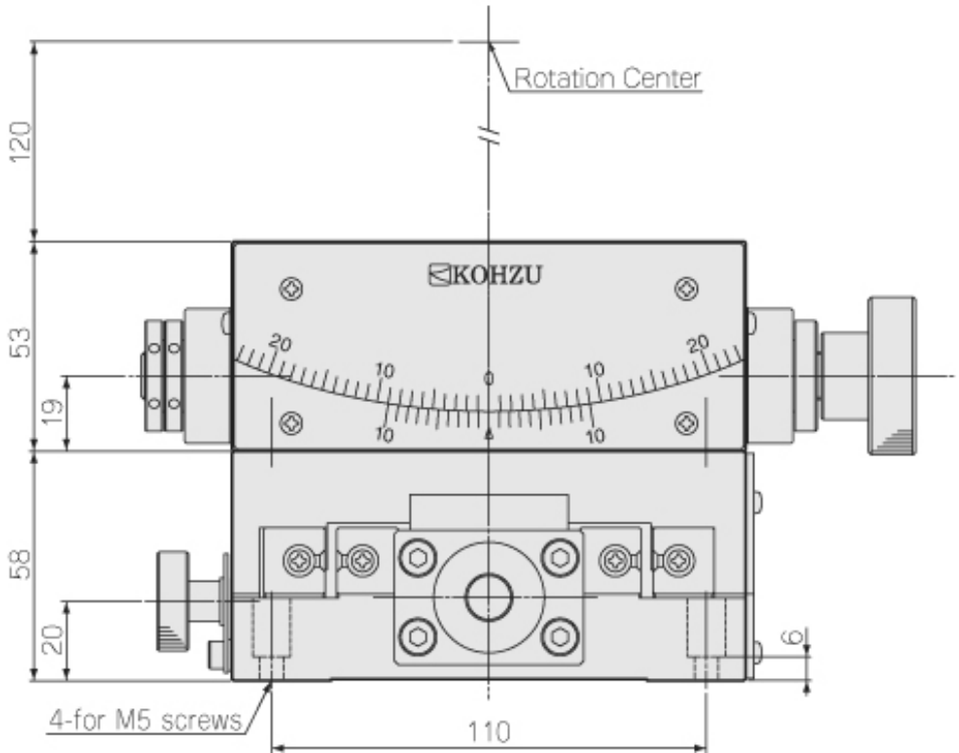
Rotation Center
120
KOHZU
53
19
58
20
6
4-for M5 screws
110