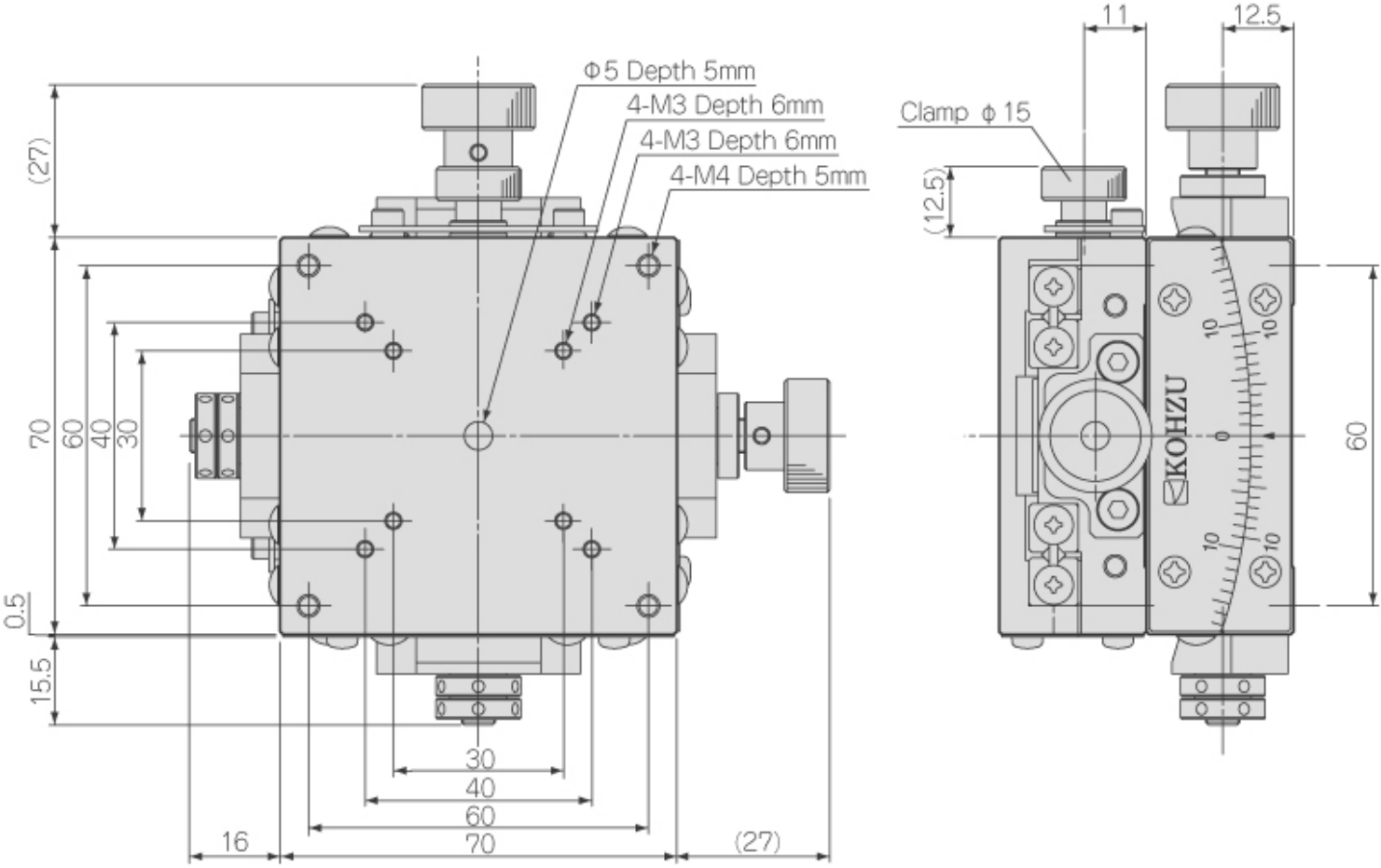
Φ5 Depth 5mm
4-M3 Depth 6mm
4-M3 Depth 6mm
4-M4 Depth 5mm
Clamp φ15
11
12.5
(27)
(12.5)
70
60
40
30
0.5
15.5
30
40
60
16
70
(27)
60
KOHZU
10
0

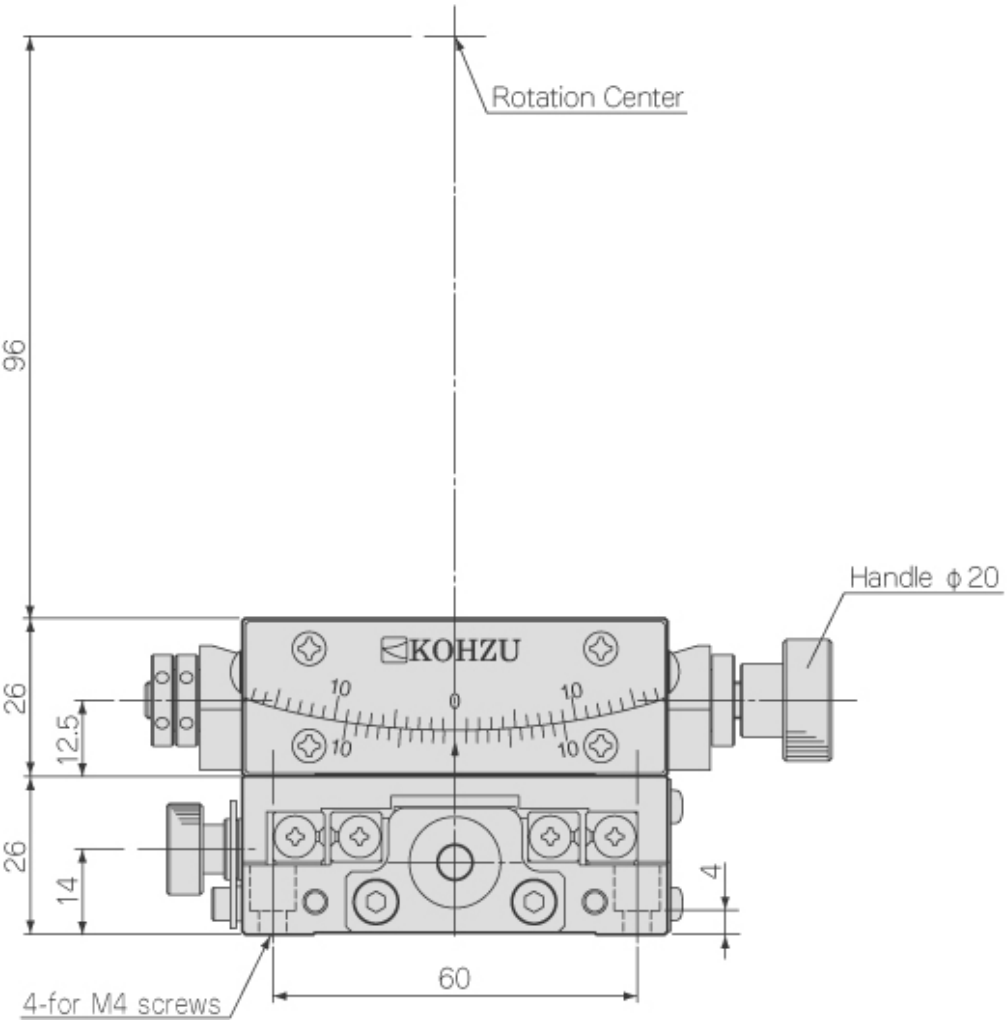
Rotation Center
96
Handle φ20
KOHZU
26
12.5
26
14
4
60
4-for M4 screws
10
0