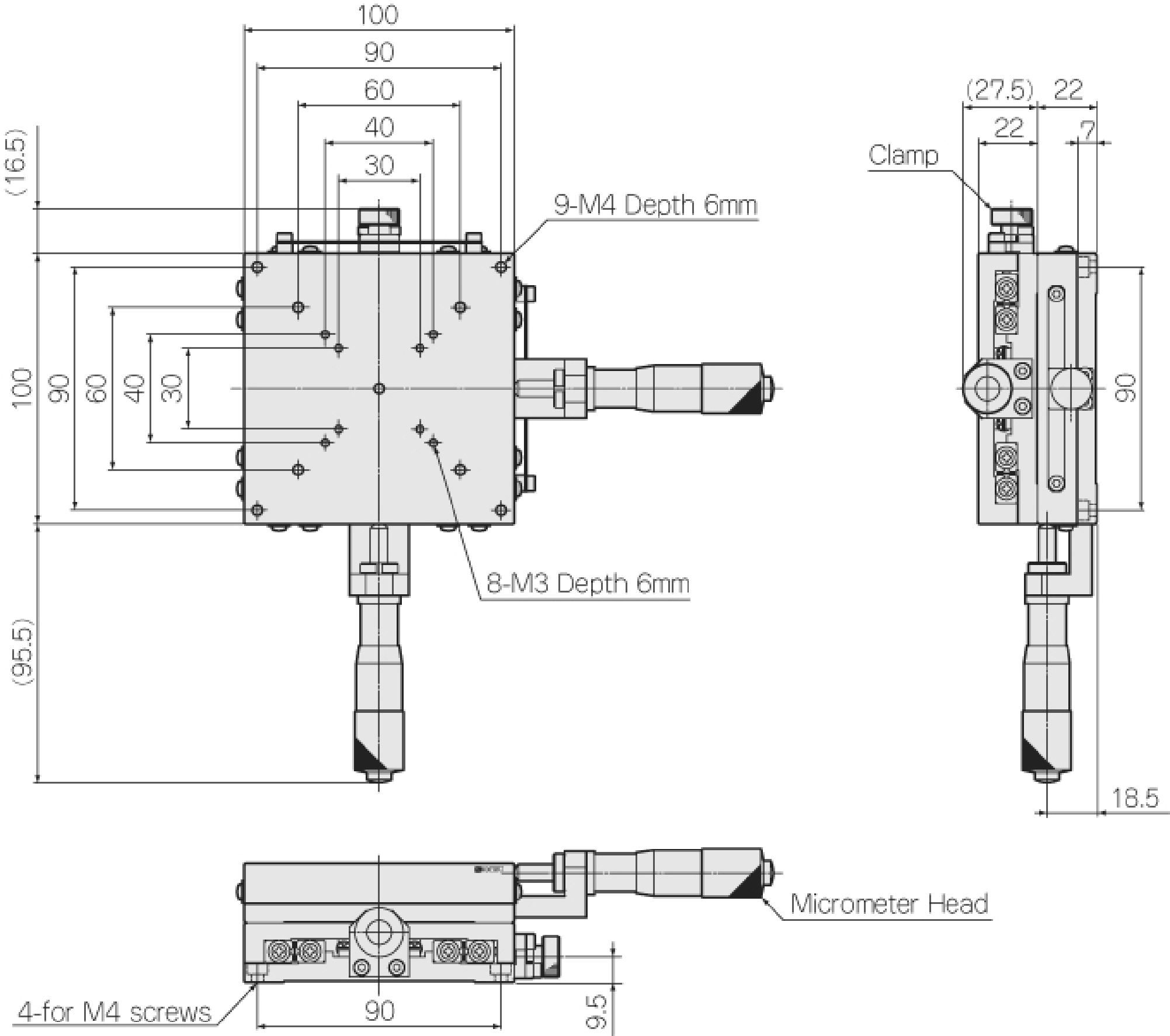
100
90
60
40
30
(16.5)
9-M4 Depth 6mm
100
90
60
40
30
8-M3 Depth 6mm
(95.5)
(27.5)
22
22
7
Clamp
90
18.5
Micrometer Head
4-for M4 screws
90
9.5