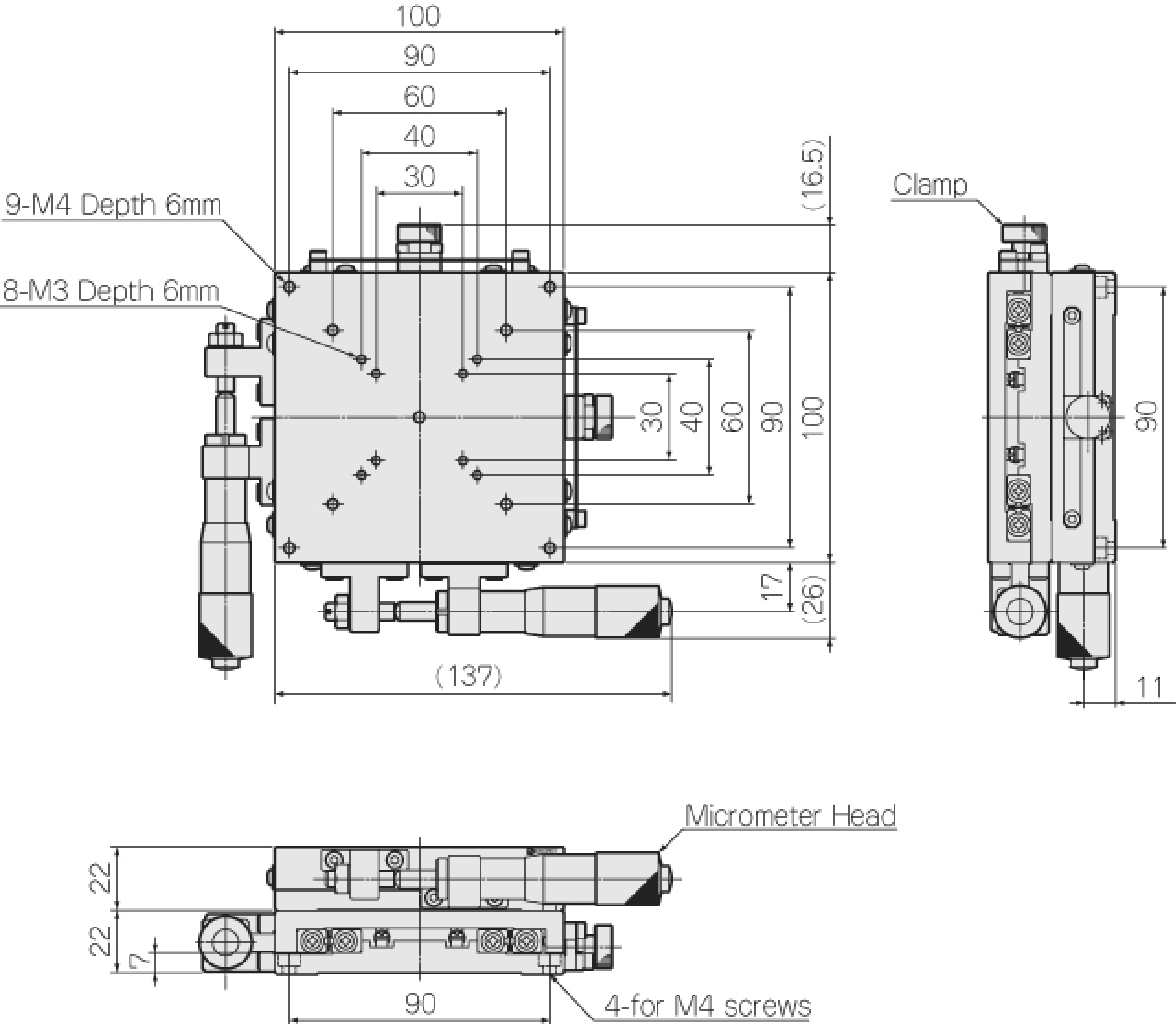
100
90
60
40
30
9-M4 Depth 6mm
8-M3 Depth 6mm
(16.5)
30
40
60
90
100
17
(26)
(137)
Clamp
90
11
Micrometer Head
22
22
7
90
4-for M4 screws