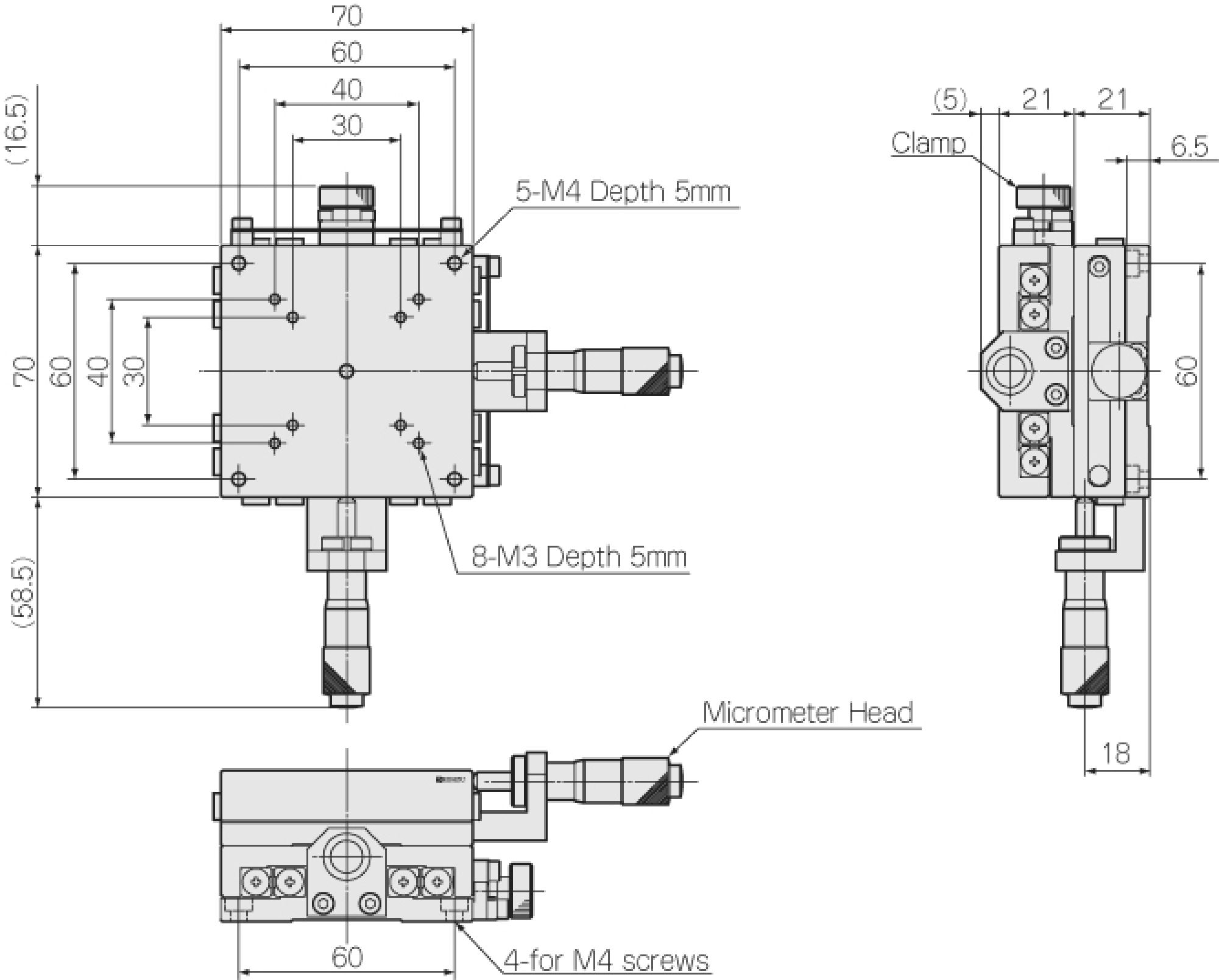
70
60
40
30
(16.5)
5-M4 Depth 5mm
70
60
40
30
8-M3 Depth 5mm
(58.5)
(5)
21
21
Clamp
6.5
60
18
Micrometer Head
60
4-for M4 screws