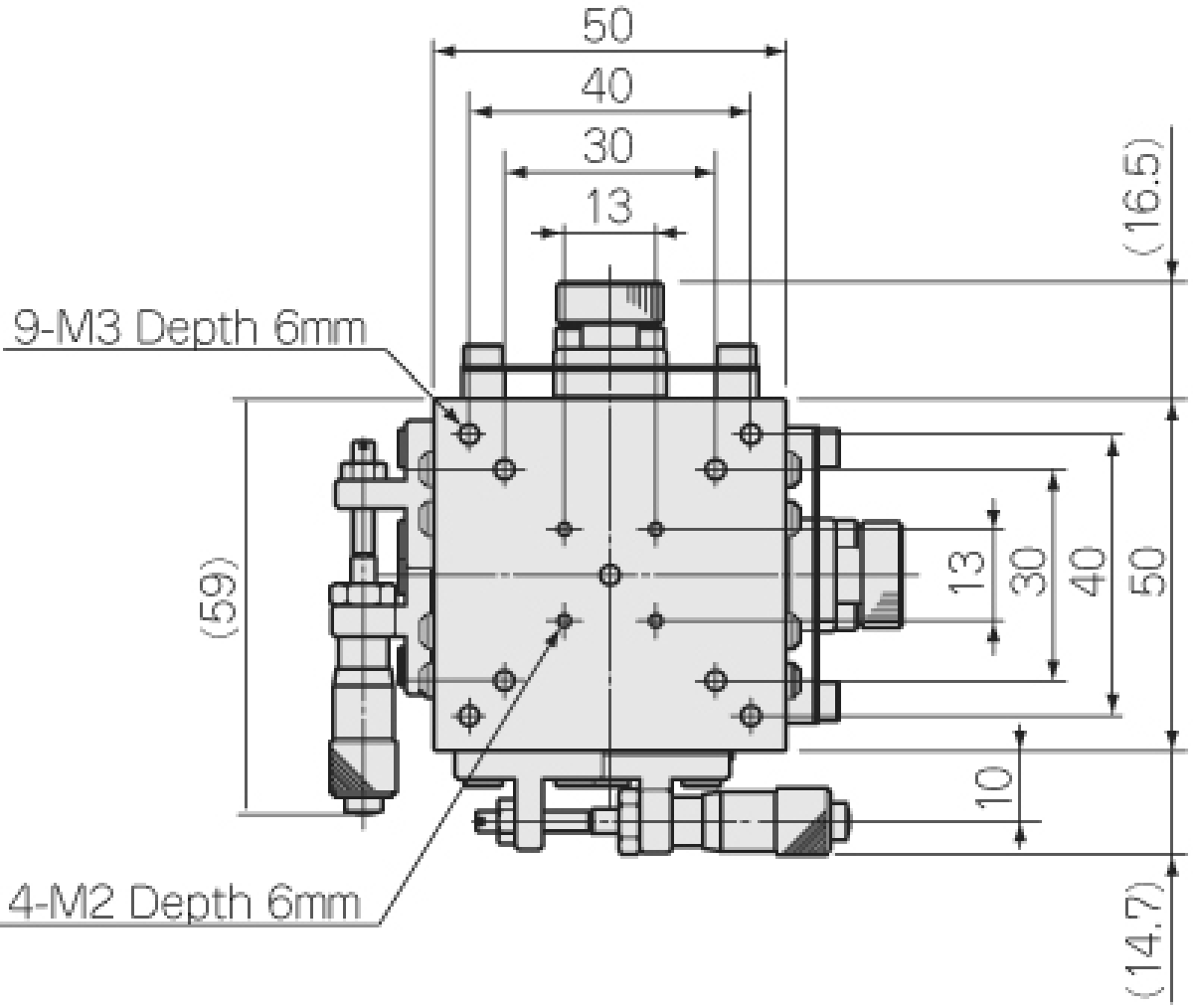
50
40
30
13
(16.5)
9-M3 Depth 6mm
(59)
13
30
40
50
10
4-M2 Depth 6mm
(14.7)

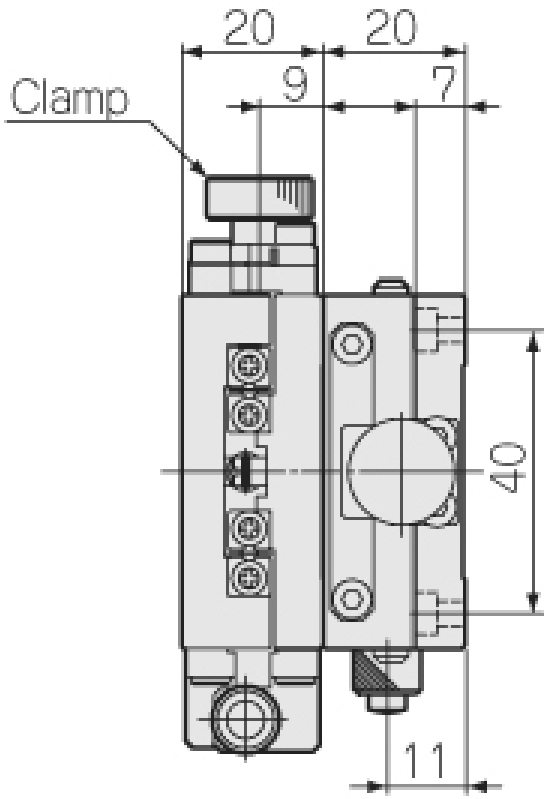
20
20
9
7
Clamp
40
11

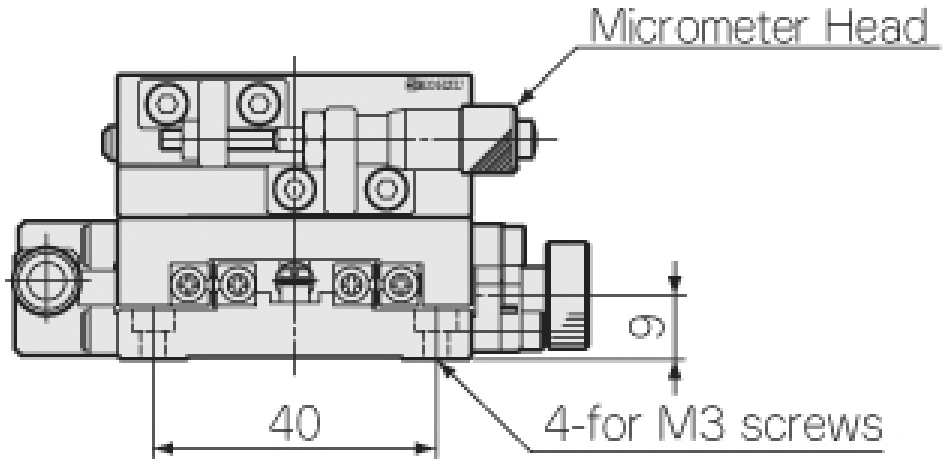
Micrometer Head
9
40
4-for M3 screws