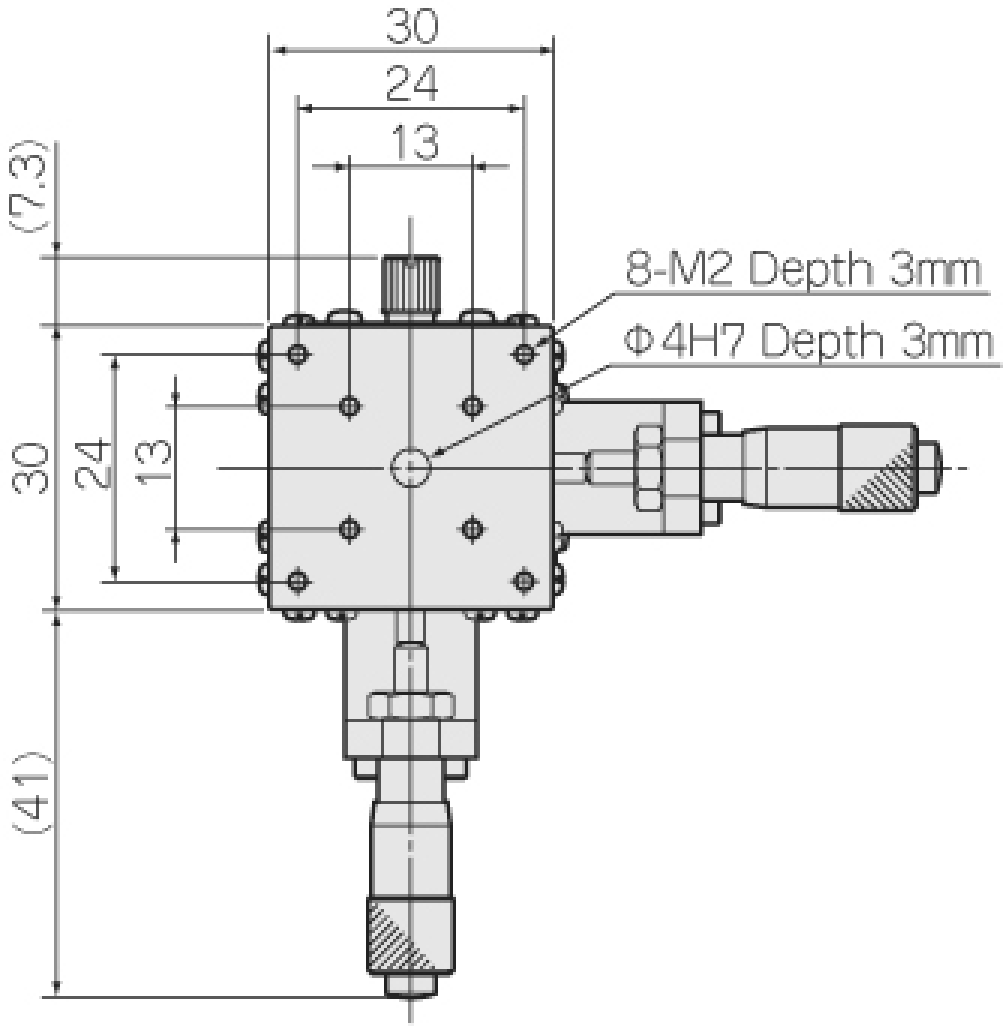
30
24
13
(7.3)
8-M2 Depth 3mm
Φ4H7 Depth 3mm
30
24
13
(41)

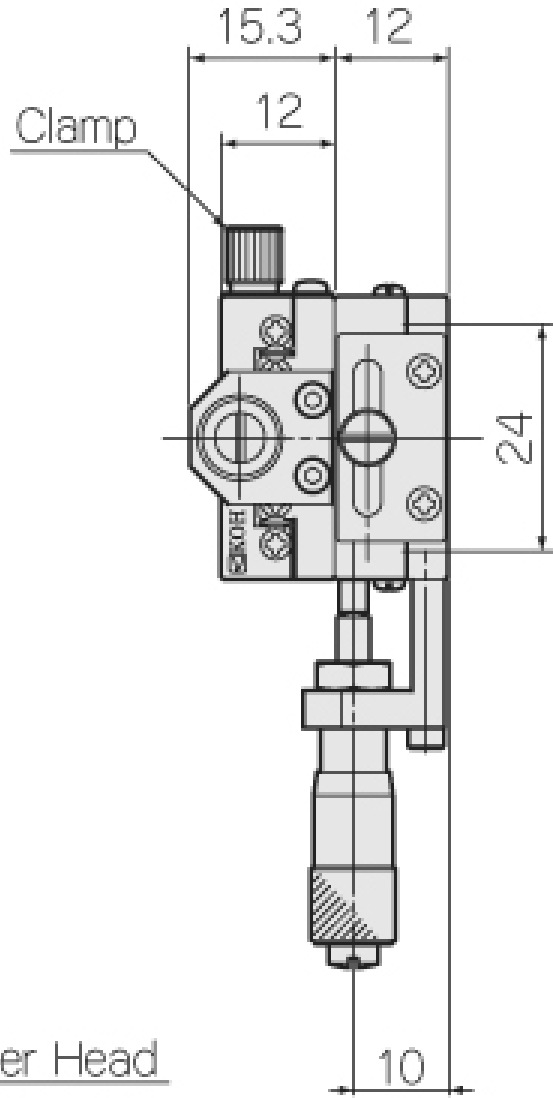
15.3
12
Clamp
12
24
10

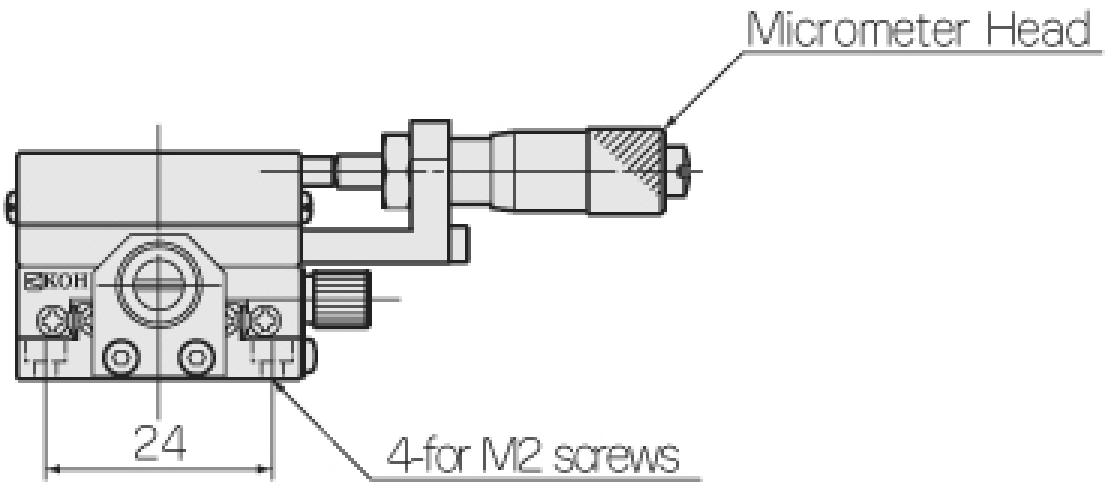
Micrometer Head
24
4-for M2 screws