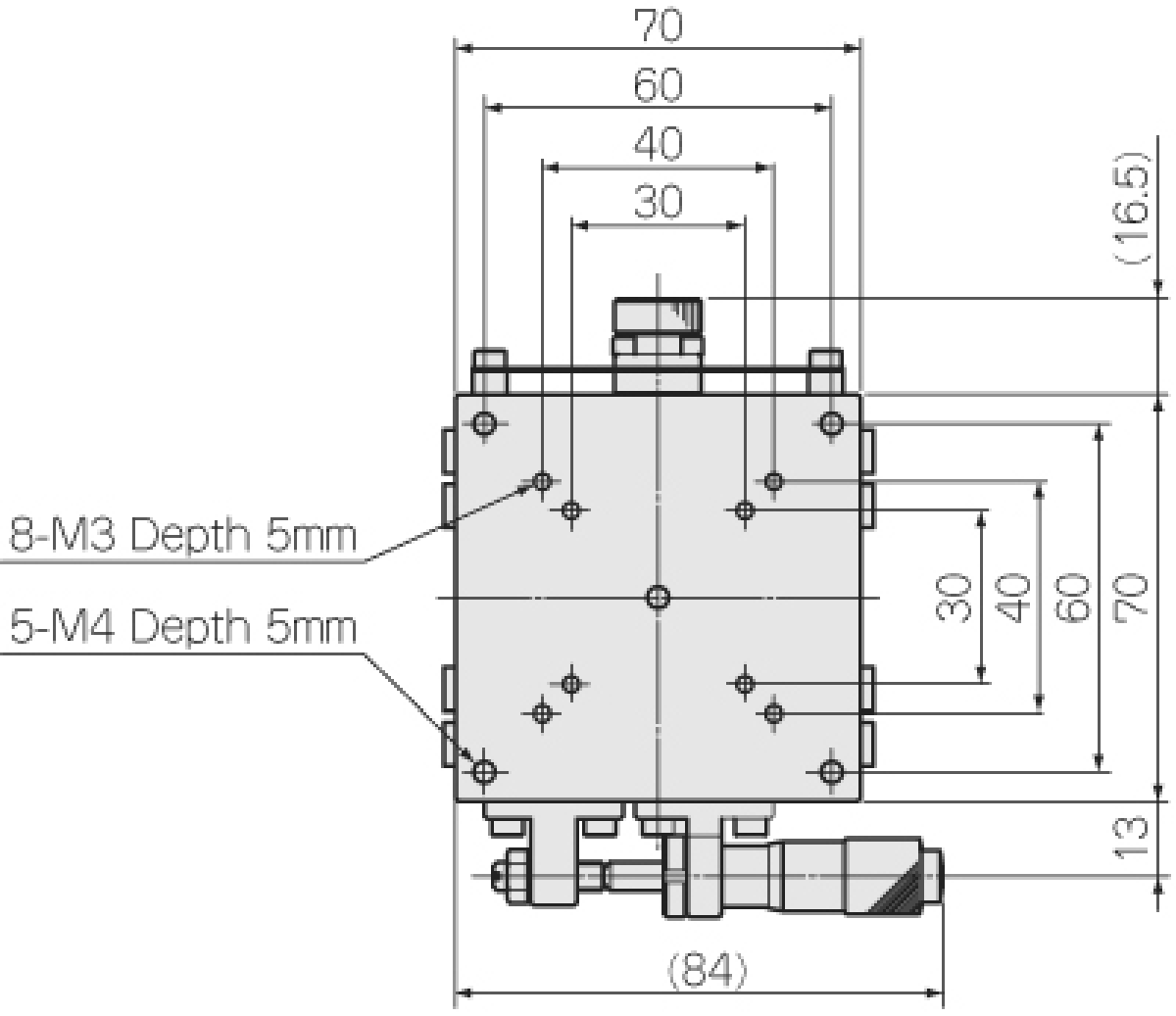
70
60
40
30
(16.5)
8-M3 Depth 5mm
5-M4 Depth 5mm
30
40
60
70
13
(84)

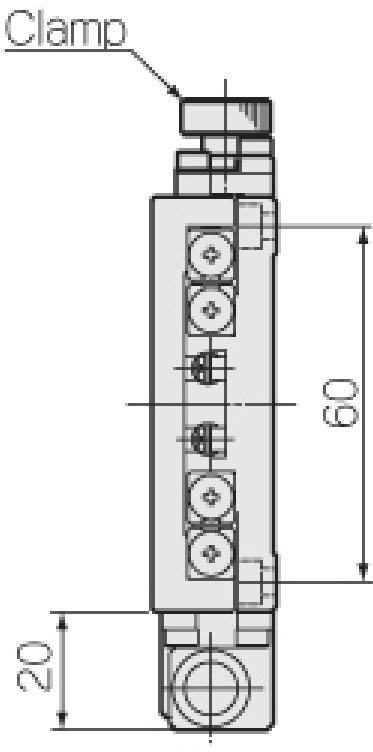
Clamp
60
20

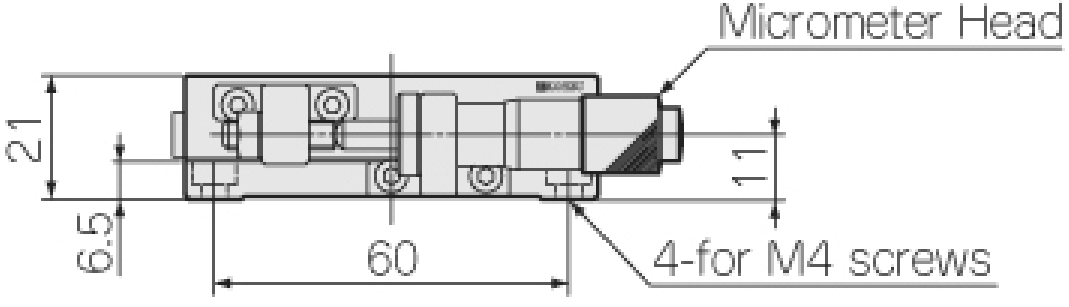
Micrometer Head
21
6.5
60
11
4-for M4 screws